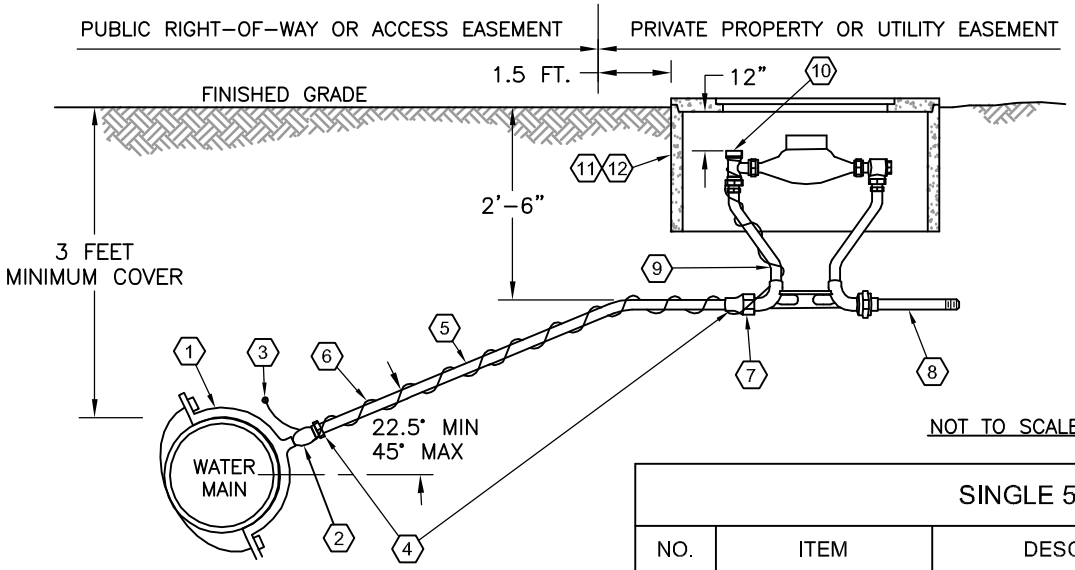

NOT TO SCALE

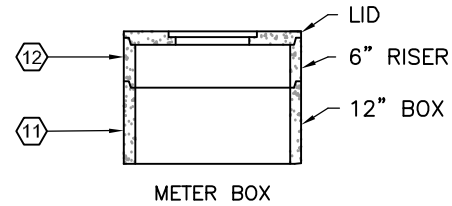

APPROVED
City of Oak Harbor
Engineering Dept.
Signature
2/24/14
Date

NOTES:

1. CONTRACTORS SHALL USE THE MATERIAL LIST SHOWN. SUBSTITUTION REQUESTS WILL BE CONSIDERED BUT MUST BE APPROVED BY THE CITY PRIOR TO INSTALLATION.
*2. AN OLYMPIC FOUNDRY SM-29 TRAFFIC BOX SHALL BE USED FOR METERS SET IN PAVED AREAS, DRIVEWAYS, SIDEWALKS, ETC.
3. ALL SETTERS SHALL BE SET FLUSH, PLUMB, AND CENTERED IN THE METER BOX.
4. INSTALL WATER SERVICE LINE PERPENDICULAR TO MAIN.
5. CORPORATION STOP TO BE IN FULL ON POSITION PRIOR TO PLACEMENT OF BACKFILL.
6. SERVICE LINE AND SETTER SHALL BE FLUSHED FOR 1-MINUTES. MUD, FOREIGN MATERIALS OR CONTAMINANTS SHALL NOT BE PERMITTED TO ENTER ANY TUBING OR FITTINGS.
7. A TIGHT FITTING CAP SHALL BE INSTALLED OVER OPEN END OF FITTING (MAKE WATER TIGHT) IF SERVICE CONNECTION IS NOT COMPLETE TO BUILDING.
8. WATER SERVICE FROM THE METER TO THE BUILDING SHALL BE INSTALLED IN ACCORDANCE WITH THE UNIFORM PLUMBING CODE (UPC).
9. BACK FLOW PREVENTION DEVICES SHALL BE INSTALLED FOR ALL IRRIGATION SERVICES AND WHERE NECESSARY TO PREVENT BACK FLOW CONTAMINATION OF THE CITY WATER SUPPLY.
10. METER BOXES SHALL BE SET ON A SAND BASE THAT IS PLACED TO WITHIN 18" OF FINISH GRADE.
11. SERVICE LINE SHALL HAVE A MINIMUM OF 4" DEPTH OF SAND BEDDING ABOVE AND BELOW THE PIPE.
12. TOP OF LID SHALL BE 2" ABOVE FINISHED GRADE EXCEPT WHEN IN HARD SURFACE.
13. ALL BRASS AND BRONZE WATER SYSTEM COMPONENTS USED IN POTABLE WATER SUPPLY SYSTEMS, EXCEPT FOR SERVICE SADDLES, FIRE HYDRANTS, AND DISTRIBUTION MAIN GATE VALVES 2" IN DIAMETER OR LARGER, SHALL BE DEMONSTRATED TO HAVE BEEN TESTED AND CERTIFIED AS "LEAD-FREE" IN COMPLIANCE WITH THE REDUCTION OF LEAD IN DRINKING WATER ACT.

SINGLE 5/8" X 3/4" METERED SERVICE

NO.	ITEM	DESCRIPTION	QUANTITY	PART NUMBER	BRAND
1	SADDLE	ALL BRASS BY 1" IPT TAP	1	S91-SERIES / 202B SERIES	FORD
2	CORP STOP	1" IPT (M) X PEP GJ	1	F-1101-4G-NL	FORD
3	WIRE CONNECTOR	3-WAY SEALED/TAPE	1	903 / 6147	IBS
4	STIFFENERS	SS INSERT FOR 1" PEP IPS PIPE	2	# 72	
5	PIPE	1" IRON PIPE SIZE PEP 200PSI	AS NEEDED	PE3408	
6	LOCATE WIRE	12 GAUGE COPPER, BLUE	AS NEEDED		
7	ADAPTER	3/4"(M) IPT X 1" PEP GJ	1	C86-34-G-NL	FORD
8	NIPPLE	3/4" IPT X IPT X 12" BRASS	1	3007N120	
9	METER SETTER	3/4" IPT X IPT X 18" W/ DBL CHECK	1	VHH72-18W-1133-NL	FORD
10	METER LOCK	FIRAMATIC METER LOCK	1		
11	METER BOX *	CONC W/ STEEL READER	1	#1 W/ STL RDR, CONC LID	BERG VLT
12	METER BOX RISER	6" CONCRETE	1	#1	BERG VLT

NOTE: DETAIL IS SCHEMATIC. ACTUAL ITEM SPECIFIED IN MATERIAL LIST MAY VARY IN STYLE OR APPEARANCE.

City of Oak Harbor
ENGINEERING DEPARTMENT
865 SE Barrington Drive
Oak Harbor, WA 98277

SINGLE WATER SERVICE 5/8 X 3/4-INCH METER

ACAD-W-3A 5_8 X 3_4-inch water meter.dwg

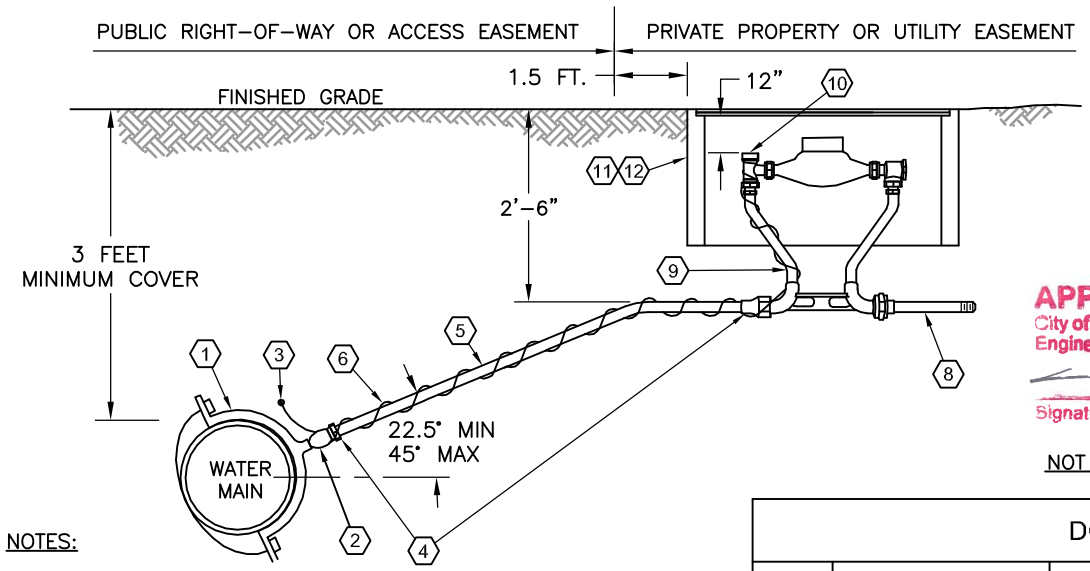

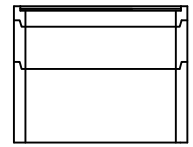

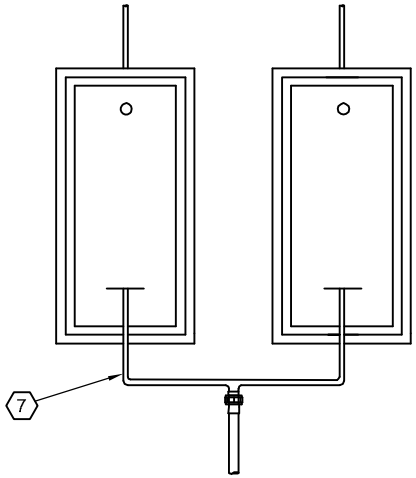

APPROVED
City of Oak Harbor
Engineering Dept.
Signature
2/24/14
Date

NOT TO SCALE

NOTES:

1. CONTRACTORS SHALL USE THE MATERIAL LIST SHOWN. SUBSTITUTION REQUESTS WILL BE CONSIDERED BUT MUST BE APPROVED BY THE CITY PRIOR TO INSTALLATION.
*2. AN OLYMPIC FOUNDRY SM–29 TRAFFIC BOX SHALL BE USED FOR METERS SET IN PAVED AREAS, DRIVEWAYS, SIDEWALKS, ETC.
3. ALL LINE SETTERS SHALL BE SET FLUSH, PLUMB, AND CENTERED IN THE METER BOXES.
4. INSTALL WATER SERVICE LINE PERPENDICULAR TO MAIN.
5. CORPORATION STOP TO BE IN FULL ON POSITION PRIOR TO PLACEMENT OF BACKFILL.
6. SERVICE LINE AND SETTER SHALL BE FLUSHED FOR 1–MINUTE. MUD, FOREIGN MATERIALS OR CONTAMINANTS SHALL NOT BE PERMITTED TO ENTER ANY TUBING OR FITTINGS.
7. A TIGHT FITTING PLUG SHALL BE INSTALLED OVER OPEN END OF FITTING (MAKE WATER TIGHT) IF SERVICE CONNECTIONS ARE NOT COMPLETE TO BUILDING.
8. WATER SERVICES FROM THE METERS TO THE BUILDING SHALL BE INSTALLED IN ACCORDANCE WITH THE UNIFORM PLUMBING CODE (UPC).
9. ALL MANIFOLD METERS SHALL BE APPROVED BY THE CITY ENGINEER PRIOR TO INSTALLATION.
10. BACK FLOW PREVENTION DEVICES SHALL BE INSTALLED FOR ALL IRRIGATION SERVICES AND WHERE NECESSARY TO PREVENT BACK FLOW CONTAMINATION OF THE CITY WATER SUPPLY.
11. METER BOXES SHALL BE SET ON A SAND BASE THAT IS PLACED TO WITHIN 18" OF FINISH GRADE.
12. SERVICE LINE SHALL HAVE A MINIMUM OF 4" DEPTH OF SAND BEDDING ABOVE AND BELOW THE PIPE.
13. ALL BRASS AND BRONZE WATER SYSTEM COMPONENTS USED IN POTABLE WATER SUPPLY SYSTEMS, EXCEPT FOR SERVICE SADDLES, FIRE HYDRANTS, AND DISTRIBUTION MAIN GATE VALVES 2" IN DIAMETER OR LARGER, SHALL BE DEMONSTRATED TO HAVE BEEN TESTED AND CERTIFIED AS "LEAD–FREE" IN COMPLIANCE WITH THE REDUCTION OF LEAD IN DRINKING WATER ACT.

DOUBLE 5/8" X 3/4" METERED SERVICE

NO.	ITEM	DESCRIPTION	QUANTITY	PART NUMBER	BRAND
1	SADDLE	ALL BRASS BY 1" IPT TAP	1	S91-SERIES / 202B SERIES	FORD
2	CORP STOP	1" IPT (M) X PEP GJ	1	F-1101-4G-NL	FORD
3	WIRE CONNECTOR	3-WAY SEALED/TAPE	1	903 / 6147	IBS
4	STIFFENERS	SS INSERT FOR 1" PEP IPS PIPE	2	# 72	
5	PIPE	1" IRON PIPE SIZE PEP 200PSI	AS NEEDED	PE3408	
6	LOCATE WIRE	12 GAUGE COPPER, BLUE	AS NEEDED		
7	U BRANCH	1" IPS PEP GJ X (2)IPT M X 14"	1	U68-43-14-NL	FORD
8	NIPPLE	3/4" IPT X IPT X 12" BRASS	2	3007N120	
9	METER SETTER	3/4" IPT X IPT X 18" W/ DBL CHECK	2	VHH72-18W-11-33-NL	FORD
10	METER LOCK	FIRAMATIC METER LOCK	2		
11	METER BOX *	CONC W/ STEEL READER	2	#1 W/ STL RDR, CONC LID	BERG VLT
12	METER BOX RISER	6" CONCRETE	2	#1	BERG VLT

NOTE: DETAIL IS SCHEMATIC. ACTUAL ITEM SPECIFIED IN MATERIAL LIST MAY VARY IN STYLE OR APPEARANCE.

City of Oak Harbor
ENGINEERING DEPARTMENT
865 SE Barrington Drive
Oak Harbor, WA 98277

MANIFOLD WATER SERVICE 5/8" METER

ACAD–W–3E Manifolded half inch water meter.dwg

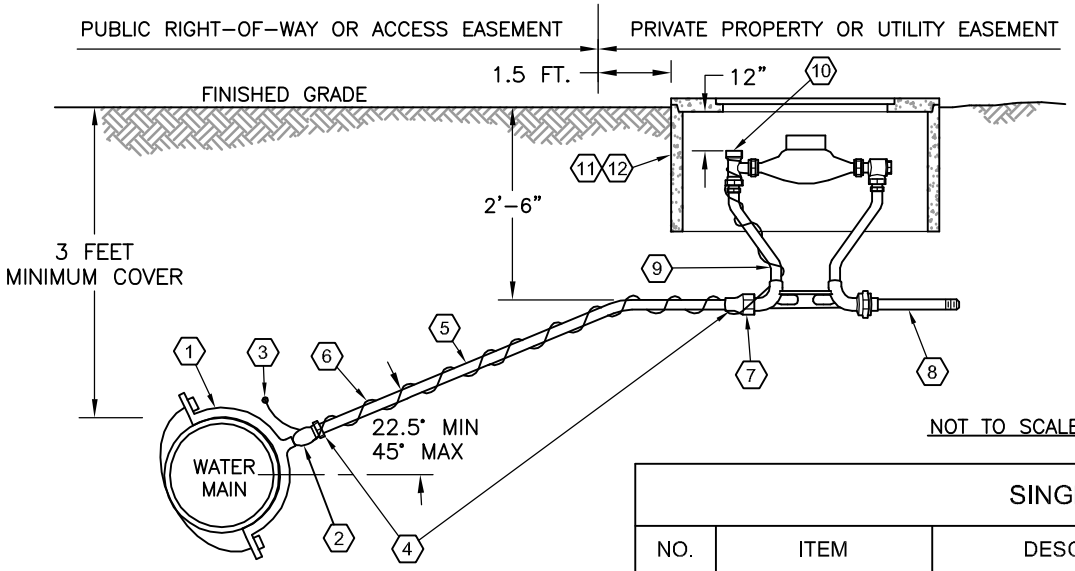

NOT TO SCALE

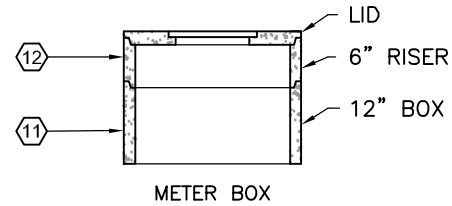

APPROVED
City of Oak Harbor
Engineering Dept.
Signature
2/24/14
Date

NOTES:

1. CONTRACTORS SHALL USE THE MATERIAL LIST SHOWN. SUBSTITUTION REQUESTS WILL BE CONSIDERED BUT MUST BE APPROVED BY THE CITY PRIOR TO INSTALLATION.
*2. AN OLYMPIC FOUNDRY SM-29 TRAFFIC BOX SHALL BE USED FOR METERS SET IN PAVED AREAS, DRIVEWAYS, SIDEWALKS, ETC.
3. ALL LINE SETTERS SHALL BE SET FLUSH, PLUMB, AND CENTERED IN THE METER BOX.
4. INSTALL WATER SERVICE LINE PERPENDICULAR TO MAIN.
5. CORPORATION STOP TO BE IN FULL ON POSITION PRIOR TO PLACEMENT OF BACKFILL.
6. SERVICE LINE AND SETTER SHALL BE FLUSHED FOR 1-MINUTE. MUD, FOREIGN MATERIALS OR CONTAMINANTS SHALL NOT BE PERMITTED TO ENTER ANY TUBING OR FITTINGS.
7. A TIGHT FITTING PLUG SHALL BE INSTALLED OVER OPEN END OF FITTING (MAKE WATER TIGHT) IF SERVICE CONNECTION IS NOT COMPLETE TO BUILDING.
8. WATER SERVICE FROM THE METER TO THE BUILDING SHALL BE INSTALLED IN ACCORDANCE WITH THE UNIFORM PLUMBING CODE (UPC).
9. BACK FLOW PREVENTION DEVICES SHALL BE INSTALLED FOR ALL IRRIGATION SERVICES AND WHERE NECESSARY TO PREVENT BACK FLOW CONTAMINATION OF THE CITY WATER SUPPLY.
10. METER BOXES SHALL BE SET ON A SAND BASE THAT IS PLACED TO WITHIN 18" OF FINISH GRADE.
11. SERVICE LINE SHALL HAVE A MINIMUM OF 4" DEPTH OF SAND BEDDING ABOVE AND BELOW THE PIPE.
12. TOP OF LID SHALL BE 2" ABOVE FINISHED GRADE EXCEPT WHEN IN HARD SURFACE.
13. ALL BRASS AND BRONZE WATER SYSTEM COMPONENTS USED IN POTABLE WATER SUPPLY SYSTEMS, EXCEPT FOR SERVICE SADDLES, FIRE HYDRANTS, AND DISTRIBUTION MAIN GATE VALVES 2" IN DIAMETER OR LARGER, SHALL BE DEMONSTRATED TO HAVE BEEN TESTED AND CERTIFIED AS "LEAD-FREE" IN COMPLIANCE WITH THE REDUCTION OF LEAD IN DRINKING WATER ACT.

SINGLE 1" METERED SERVICE

NO.	ITEM	DESCRIPTION	QUANTITY	PART NUMBER	BRAND
1	SADDLE	ALL BRASS BY 1" IPT TAP	1	S91-SERIES / 202B SERIES	FORD
2	CORP STOP	1" IPT (M) X PEP GJ	1	F-1101-4G-NL	FORD
3	WIRE CONNECTOR	3-WAY SEALED/TAPE	1	903 / 6147	IBS
4	STIFFENERS	SS INSERT FOR 1" PEP IPS PIPE	2	# 72	
5	PIPE	1" IRON PIPE SIZE PEP 200PSI	AS NEEDED	PE3408	
6	LOCATE WIRE	12 GAUGE COPPER, BLUE	AS NEEDED		
7	ADAPTER	1"(M) IPT X 1" IPS PEP GJ	1	C86-44-G-NL	FORD
8	NIPPLE	1" IPT X IPT X 12" BRASS	1	3010N120	
9	METER SETTER	1" IPT X IPT X 18" W/ DBL CHECK	1	VHH72-18W-11-44	FORD
10	METER LOCK	FIRAMATIC METER LOCK	1		
11	METER BOX *	CONC W/ STEEL READER	1	#3 CONCRETE LID W/ STEEL READER	BERG VLT
12	METER BOX RISER	6" CONCRETE	1	#3	BERG VLT

NOTE: DETAIL IS SCHEMATIC. ACTUAL ITEM SPECIFIED IN MATERIAL LIST MAY VARY IN STYLE OR APPEARANCE.

City of Oak Harbor
ENGINEERING DEPARTMENT
865 SE Barrington Drive
Oak Harbor, WA 98277

SINGLE WATER SERVICE 1-INCH METER

ACAD-W-3B 1-inch water meter.dwg

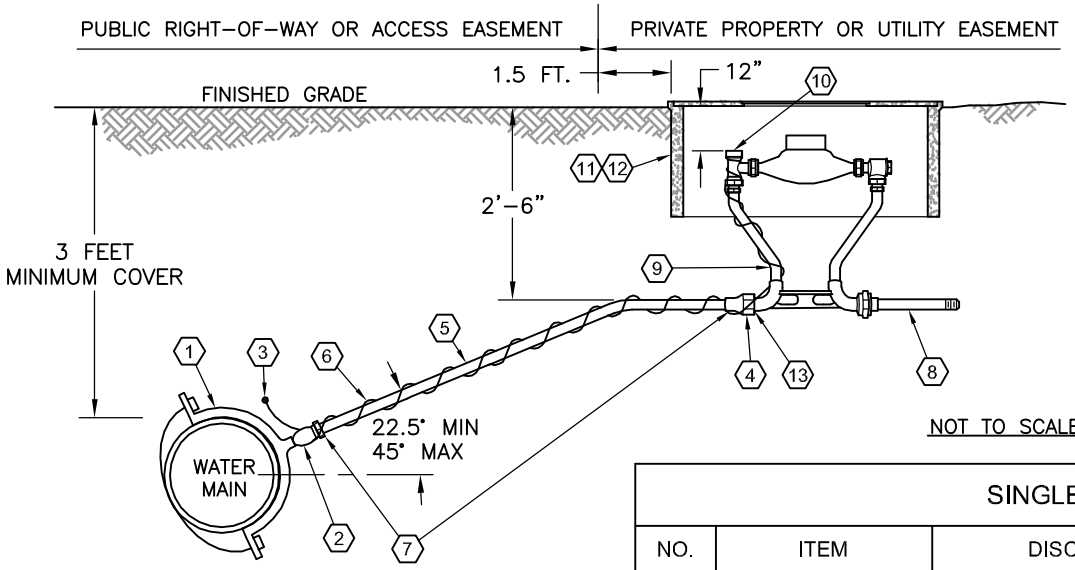

NOT TO SCALE

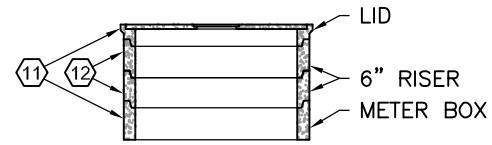

METER BOX
(1 1/2" & 2" SERVICES)

APPROVED
City of Oak Harbor
Engineering Dept.
Signature
2/24/14
Date

NOTES:

1. CONTRACTORS SHALL USE THE MATERIAL LIST SHOWN. SUBSTITUTION REQUESTS WILL BE CONSIDERED BUT MUST BE APPROVED BY THE CITY PRIOR TO INSTALLATION.
*2. AN OLYMPIC FOUNDRY SM-30 TRAFFIC BOX SHALL BE USED FOR METERS SET IN PAVED AREAS, DRIVEWAY, SIDEWALK, ETC.
3. ALL LINE SETTERS SHALL BE SET FLUSH, PLUMB, AND CENTERED IN THE METER BOX.
4. INSTALL WATER SERVICE LINE PERPENDICULAR TO MAIN.
5. CORPORATION STOP TO BE IN FULL ON POSITION PRIOR TO PLACEMENT OF BACKFILL.
6. SERVICE LINE AND SETTER SHALL BE FLUSHED FOR 1-MINUTE. MUD, FOREIGN MATERIALS OR CONTAMINANTS SHALL NOT BE PERMITTED TO ENTER ANY TUBING OR FITTINGS.
7. A TIGHT FITTING PLUG SHALL BE INSTALLED OVER OPEN END OF FITTING (MAKE WATER TIGHT) IF SERVICE CONNECTION IS NOT COMPLETE TO BUILDING.
8. WATER SERVICE FROM THE METER TO THE BUILDING SHALL BE INSTALLED IN ACCORDANCE WITH THE UNIFORM PLUMBING CODE (UPC).
9. BACK FLOW PREVENTION DEVICES SHALL BE INSTALLED FOR ALL IRRIGATION SERVICES AND WHERE NECESSARY TO PREVENT BACK FLOW CONTAMINATION OF THE CITY WATER SUPPLY.
10. METER BOXES SHALL BE SET ON A SAND BASE THAT IS PLACED TO WITHIN 18" OF FINISH GRADE.
11. SERVICE LINE SHALL HAVE A MINIMUM OF 4" DEPTH OF SAND BEDDING ABOVE AND BELOW THE PIPE.
12. TOP OF LID SHALL BE 2" ABOVE FINISHED GRADE EXCEPT WHEN IN HARD SURFACE.
13. ALL BRASS AND BRONZE WATER SYSTEM COMPONENTS USED IN POTABLE WATER SUPPLY SYSTEMS, EXCEPT FOR SERVICE SADDLES, FIRE HYDRANTS, AND DISTRIBUTION MAIN GATE VALVES 2" IN DIAMETER OR LARGER, SHALL BE DEMONSTRATED TO HAVE BEEN TESTED AND CERTIFIED AS "LEAD-FREE" IN COMPLIANCE WITH THE REDUCTION OF LEAD IN DRINKING WATER ACT.

SINGLE 1 1/2" METERED SERVICE

NO.	ITEM	DISCRIPTION	QUANTITY	PART NUMBER	BRAND
1	SADDLE	ALL BRASS BY 2" IPT TAP	1	S91-SERIES / 202B SERIES	FORD
2	CORP STOP	2" IPT (M) X PEP GJ	1	FB-500-7-NL	FORD
3	WIRE CONNECTOR	3-WAY SEALED/TAPE	1	903 / 6147	IBS
4	BUSHING	2" IPT X 1 1/2" IPT BRASS	1		
5	PIPE	2" TYPE K COPPER	AS NEEDED	TYPE "K"	
6	LOCATE WIRE	12 GAUGE COPPER, BLUE	AS NEEDED		
7	ADAPTER	2"(F) IPT X 2" CTS GJ	2	C14-77-G-NL	FORD
8	NIPPLE	1 1/2" IPT X IPT X 12" BRASS	1	SCH-40 B-43	
9	METER SETTER	1 1/2" IPT X IPT X 12" W/ DBL CHECK AND HIGH BYPASS	1	VBHH76-12HB-11-66-NL	FORD
10	METER LOCK	FIRAMATIC METER LOCK	2		
11	METER BOX *	CONC W/ STEEL READER	1	#2 CONCRETE LID W/ STEEL READER	BERG VLT
12	METER BOX RISER	6" CONCRETE	2	#2	BERG VLT
13	NIPPLE	1 1/2" IPT CLOSE NIPPLE	1	3015N120	

NOTE: FOR 1 1/2" IRRIGATION SERVICE, SUBSTITUTE VB76-12-1166 FOR METER SETTER PART NUMBER ABOVE. DETAIL IS SCHEMATIC. ACTUAL ITEM SPECIFIED IN MATERIAL LIST MAY VARY IN STYLE OR APPEARANCE.

City of Oak Harbor
ENGINEERING DEPARTMENT
865 SE Barrington Drive
Oak Harbor, WA 98277

SINGLE WATER SERVICE
1.5 INCH METER

ACAD-W-3C 1.5 inch water meter.dwg

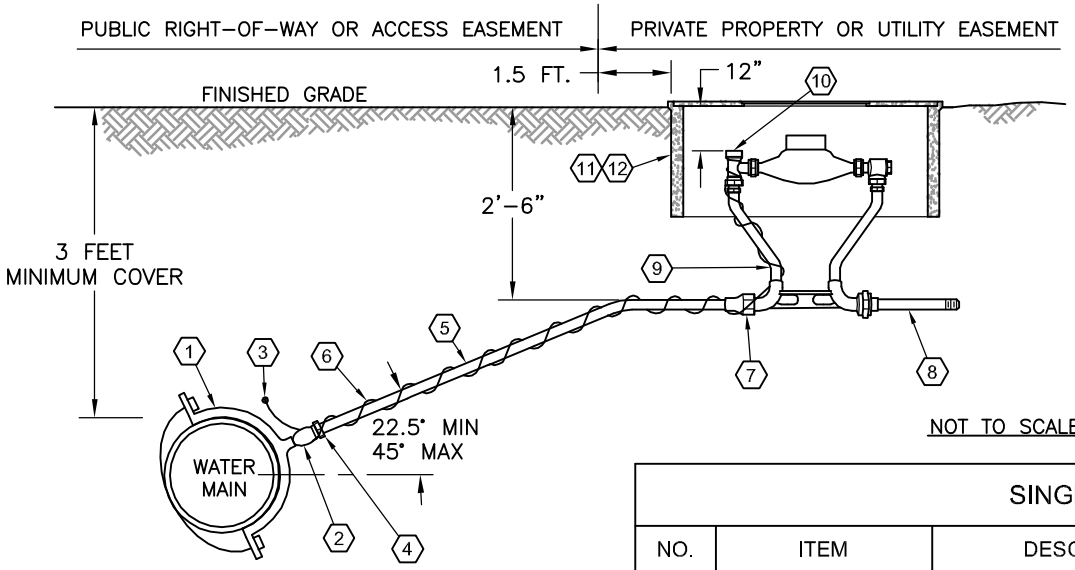

NOT TO SCALE

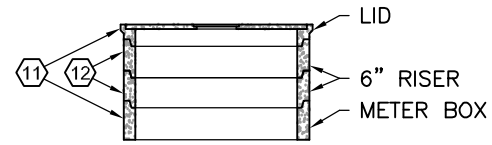

METER BOX
(1 1/2" & 2" SERVICES)

APPROVED
City of Oak Harbor
Engineering Dept.
Signature
2/24/14
Date

NOTES:

1. CONTRACTORS SHALL USE THE MATERIAL LIST SHOWN. SUBSTITUTION REQUESTS WILL BE CONSIDERED BUT MUST BE APPROVED BY THE CITY PRIOR TO INSTALLATION.
*2. AN OLYMPIC FOUNDRY SM-30 TRAFFIC BOX SHALL BE USED FOR METERS SET IN PAVED AREAS, DRIVEWAY, SIDEWALK, ETC.
3. ALL LINE SETTERS SHALL BE SET FLUSH, PLUMB, AND CENTERED IN THE METER BOX.
4. INSTALL WATER SERVICE LINE PERPENDICULAR TO MAIN.
5. CORPORATION STOP TO BE IN FULL ON POSITION PRIOR TO PLACEMENT OF BACKFILL.
6. SERVICE LINE AND SETTER SHALL BE FLUSHED FOR 1-MINUTE. MUD, FOREIGN MATERIALS OR CONTAMINANTS SHALL NOT BE PERMITTED TO ENTER ANY TUBING OR FITTINGS.
7. A TIGHT FITTING PLUG SHALL BE INSTALLED OVER OPEN END OF FITTING (MAKE WATER TIGHT) IF SERVICE CONNECTION IS NOT COMPLETE TO BUILDING.
8. WATER SERVICE FROM THE METER TO THE BUILDING SHALL BE INSTALLED IN ACCORDANCE WITH THE UNIFORM PLUMBING CODE (UPC).
9. BACK FLOW PREVENTION DEVICES SHALL BE INSTALLED FOR ALL IRRIGATION SERVICES AND WHERE NECESSARY TO PREVENT BACK FLOW CONTAMINATION OF THE CITY WATER SUPPLY.
10. METER BOXES SHALL BE SET ON A SAND BASE THAT IS PLACED TO WITHIN 18" OF FINISH GRADE.
11. SERVICE LINE SHALL HAVE A MINIMUM OF 4" DEPTH OF SAND BEDDING ABOVE AND BELOW THE PIPE.
12. TOP OF LID SHALL BE 2" ABOVE FINISHED GRADE EXCEPT WHEN IN HARD SURFACE.
13. ALL BRASS AND BRONZE WATER SYSTEM COMPONENTS USED IN POTABLE WATER SUPPLY SYSTEMS, EXCEPT FOR SERVICE SADDLES, FIRE HYDRANTS, AND DISTRIBUTION MAIN GATE VALVES 2" IN DIAMETER OR LARGER, SHALL BE DEMONSTRATED TO HAVE BEEN TESTED AND CERTIFIED AS "LEAD-FREE" IN COMPLIANCE WITH THE REDUCTION OF LEAD IN DRINKING WATER ACT.

SINGLE 2" METERED SERVICE

NO.	ITEM	DESCRIPTION	QUANTITY	PART NUMBER	BRAND
1	SADDLE	ALL BRASS BY 2" IPT TAP	1	S91-SERIES / 202B SERIES	FORD
2	CORP STOP	2" IPT (M) X IPT (M)	1	FB-500-7-NL	FORD
3	WIRE CONNECTOR	3-WAY SEALED/TAPE	1	903 / 6147	IBS
4	ADAPTER	2" IPT (F) X 2 " COPPER GJ	1	C14-77-G-NL	FORD
5	PIPE	2" TYPE K COPPER	AS NEEDED	TYPE "K"	
6	LOCATE WIRE	12 GAUGE COPPER, BLUE	AS NEEDED		
7	ADAPTER	2" IPT M X 2" COPPER GJ	1	C84-77-G-NL	FORD
8	NIPPLE	2" IPT X IPT X 12" BRASS	1	SCH-40 B-43	
9	METER SETTER	2" IPT X IPT X 12" W/ DBL CHECK AND HIGH BYPASS	1	VBHH77-12HB-11-77-NL	FORD
10	METER LOCK	FIRAMATIC METER LOCK	2		
11	METER BOX *	CONC W/ STEEL READER	1	#2 CONCRETE LID W/ STEEL READER	BERG VLT
12	METER BOX RISER	6" CONCRETE	2	#2	BERG VLT

NOTE: FOR 2" IRRIGATION SERVICE, SUBSTITUTE VB77-12-1177 FOR METER SETTER PART NUMBER ABOVE. DETAIL IS SCHEMATIC. ACTUAL ITEM SPECIFIED IN MATERIAL LIST MAY VARY IN STYLE OR APPEARANCE.

City of Oak Harbor
ENGINEERING DEPARTMENT
865 SE Barrington Drive
Oak Harbor, WA 98277

SINGLE WATER SERVICE 2-INCH METER

ACAD-W-3D 2-inch water meter.dwg

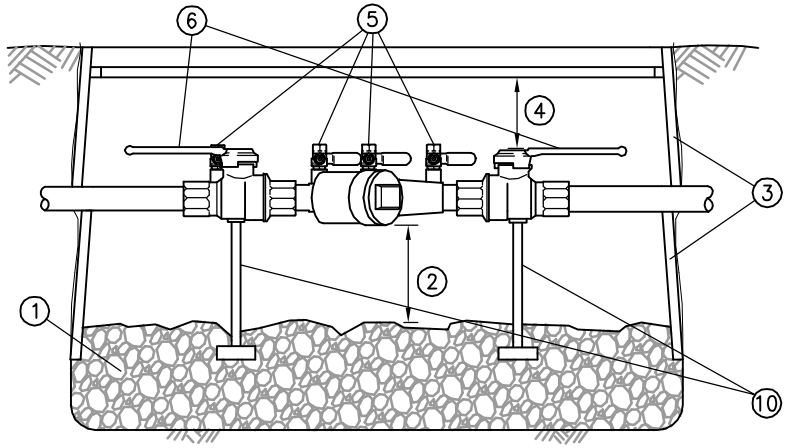

SECTION

APPROVED
City of Oak Harbor
Engineering Dept.
Signature
2/24/14
Date

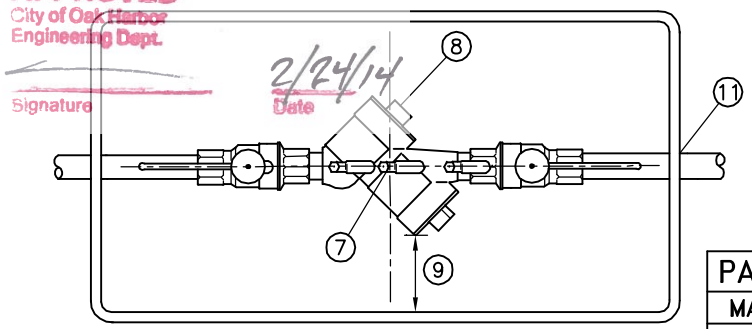

NOTES:

1. IF DAYLIGHT DRAIN SYSTEM CANNOT BE PROVIDED THEN INSTALL A 6" MINIMUM LAYER OF 1" ROUND WASHED GRAVEL AT THE BOTTOM OF THE BOX.
2. MINIMUM OF 6" BETWEEN LOWEST POINT OF DEVICE AND DRAIN ROCK.
3. TWO NO. 2 METER BOXES STACKED ON TOP OF EACH OTHER OR APPROVED EQUAL. MINIMUM 14" X 20" LID OPENING.
4. MINIMUM OF 6" AND A MAXIMUM OF 12" DISTANCE BETWEEN UNDERSIDE OF LID AND HIGHEST POINT OF THE DEVICE.
5. THE DEVICE MUST BE EQUIPPED WITH FOUR RESILIENT SEATED TEST COCKS WITH PLUGS INSTALLED. THE ASSEMBLY MUST ALSO BE INSTALLED WITH THE TEST COCKS FACING UP OR TO ONE SIDE. PLUGS SHALL BE THREADED BRASS.
6. THE DEVICE MUST ALSO BE EQUIPPED WITH TWO RESILIENT SEATED SHUT OFF VALVES.
7. CENTER DEVICE IN BOX.
8. Y-PATTERN D.C.V.A. SHOULD BE INSTALLED ON SIDE WITH TESTCOCKS FACING UPWARDS.
9. A MINIMUM DISTANCE OF 6" IS REQUIRED BETWEEN THE SIDE OF THE BOX AND THE TEST COCKS WHEN THEY ARE INSTALLED SIDE WAYS.
10. SUPPORTS WILL BE REQUIRED ON 2" AND LARGER DEVICES AS SHOWN.
11. SEAL PIPE CUTOUTS AND UNDERLAY DRAIN ROCK WITH WEED CONTROL FABRIC OR POLYETHYLENE TO PREVENT SOIL INTRUSION.

GENERAL REQUIREMENTS:

1. THE D.C.V.A CHOSEN MUST BE ON THE MOST RECENT WASHINGTON STATE APPROVAL LISTING.
2. THE D.C.V.A. MUST BE TESTED BY A WASHINGTON STATE CERTIFIED BACKFLOW ASSEMBLY TESTER AT THE TIME OF INSTALLATION, ANNUALLY, AND WHEN MOVED OR REPAIRED.
3. ALL INSTALLATION MUST MEET MANUFACTURES SPECIFICATIONS AND THE MINIMUM STANDARDS OF THE U.P.C.
4. INSTALLATION INSPECTION BY CITY OF OAK HARBOR IS REQUIRED BEFORE WATER SERVICE IS ACTIVATED.
5. ALL BRASS AND BRONZE WATER SYSTEM COMPONENTS USED IN POTABLE WATER SUPPLY SYSTEMS, EXCEPT FOR SERVICE SADDLES, FIRE HYDRANTS, AND DISTRIBUTION MAIN GATE VALVES 2" IN DIAMETER OR LARGER, SHALL BE DEMONSTRATED TO HAVE BEEN TESTED AND CERTIFIED AS "LEAD-FREE" IN COMPLIANCE WITH THE REDUCTION OF LEAD IN DRINKING WATER ACT.

PARTIAL LISTING OF STATE APPROVED DOUBLE CHECK VALVE ASSEMBLIES

MAKE	MODEL	SIZES	SHUTOFFS
WATTS	U007M1QT	3/4" OR 1"	– WATTS FIGURE FBV (FBV-E)-QT OR WATTS SERIES 6080 (& 6080-E)-QT
WATTS	950XL	3/4"	– FORTUNE FIGURE 620-QT (FORMERLY FIGURE 601 PRIVATE LABELED AS: AMES, BUCKNER, FEBCO, FLOMATIC, HERSEY AND WILKINS) – NIGBO BALL VALVES (FEBCO SERIES 622-QT & WILKINS SERIES 855-QT)
WILKINS	975XL	3/4", 1", 1 1/2", OR 2"	– FORTUNE FIGURE 620-QT (FORMERLY FIGURE 601 PRIVATE LABELED AS: AMES, BUCKNER, FEBCO, FLOMATIC, HERSEY AND WILKINS) – NIGBO BALL VALVES (FEBCO SERIES 622-QT & WILKINS SERIES 855-QT)
WILKINS	975XL	1 1/4"	– FORTUNE FIGURE 620-QT (FORMERLY FIGURE 601 PRIVATE LABELED AS: AMES, BUCKNER, FEBCO, FLOMATIC, HERSEY AND WILKINS) – FORTUNE FIGURE 620U-QT
WATTS	995QT	3/4", 1", 1 1/4", OR 1 1/2"	– SHUTOFF VALVE IS INTEGRAL PART OF ASSEMBLY

City of Oak Harbor
ENGINEERING DEPARTMENT
865 SE Barrington Drive
Oak Harbor, WA 98277

DOUBLE CHECK VALVE ASSEMBLY - 0.75-2.5"

ACAD-W-11Double Check Valve .75 to 2.5 inch.dwg

REVISED 1-6-14

NOTES:

1. HYDRANT TO BE LOCATED BEHIND SIDEWALK OR AT PROPERTY LINE AS DIRECTED BY THE CITY.
2. MAINTAIN A MINIMUM 10-FT CLEAR RADIUS AROUND THE CENTER OF THE HYDRANT.

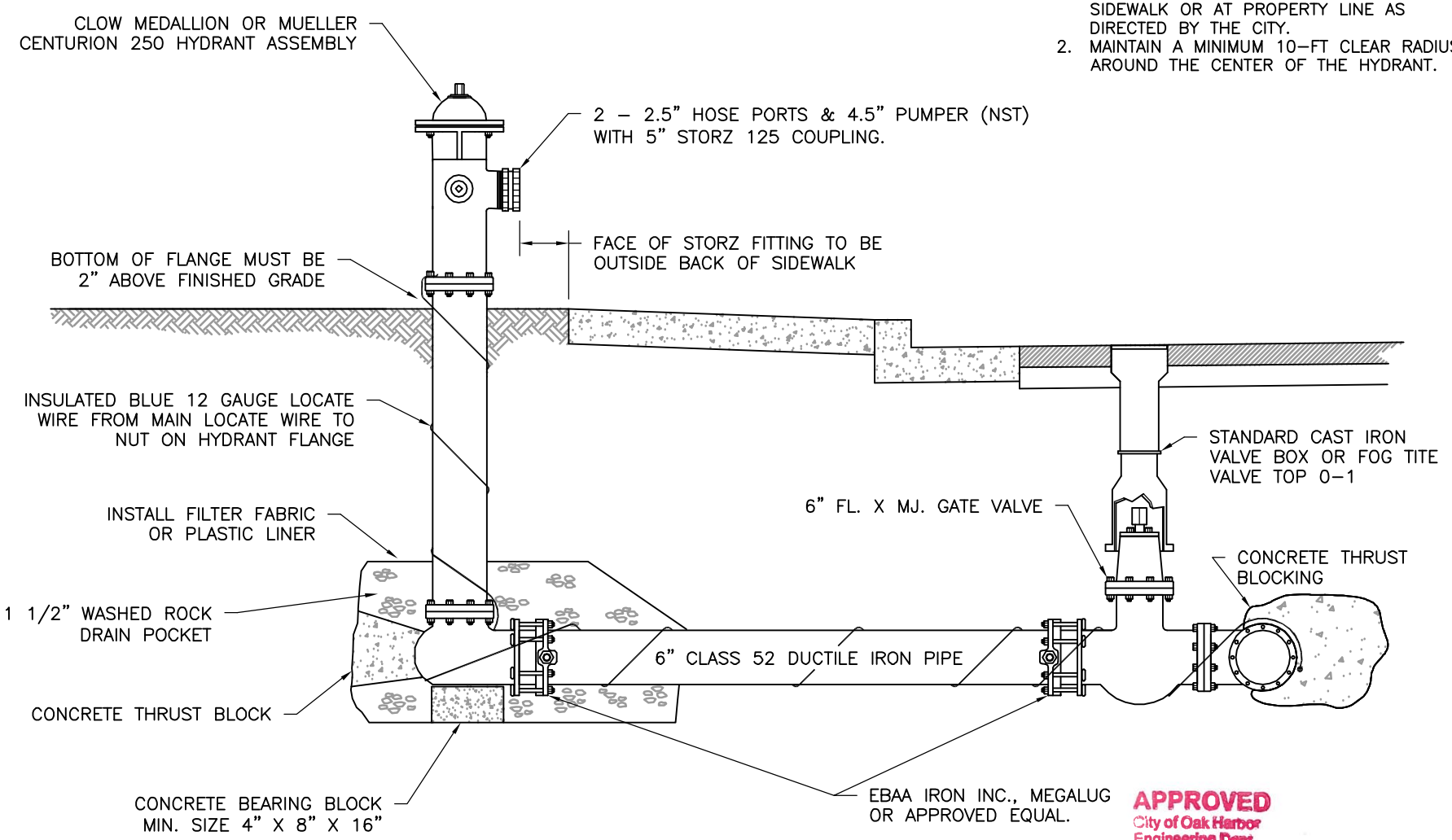

APPROVED
City of Oak Harbor
Engineering Dept.
Signature
2/24/14
Date

City of Oak Harbor
ENGINEERING DEPARTMENT
865 SE Barrington Drive
Oak Harbor, WA 98277

FIRE HYDRANT ASSEMBLY

ACAD-W-6Fire Hydrant Assembly.dwg
REVISED 1-6-14

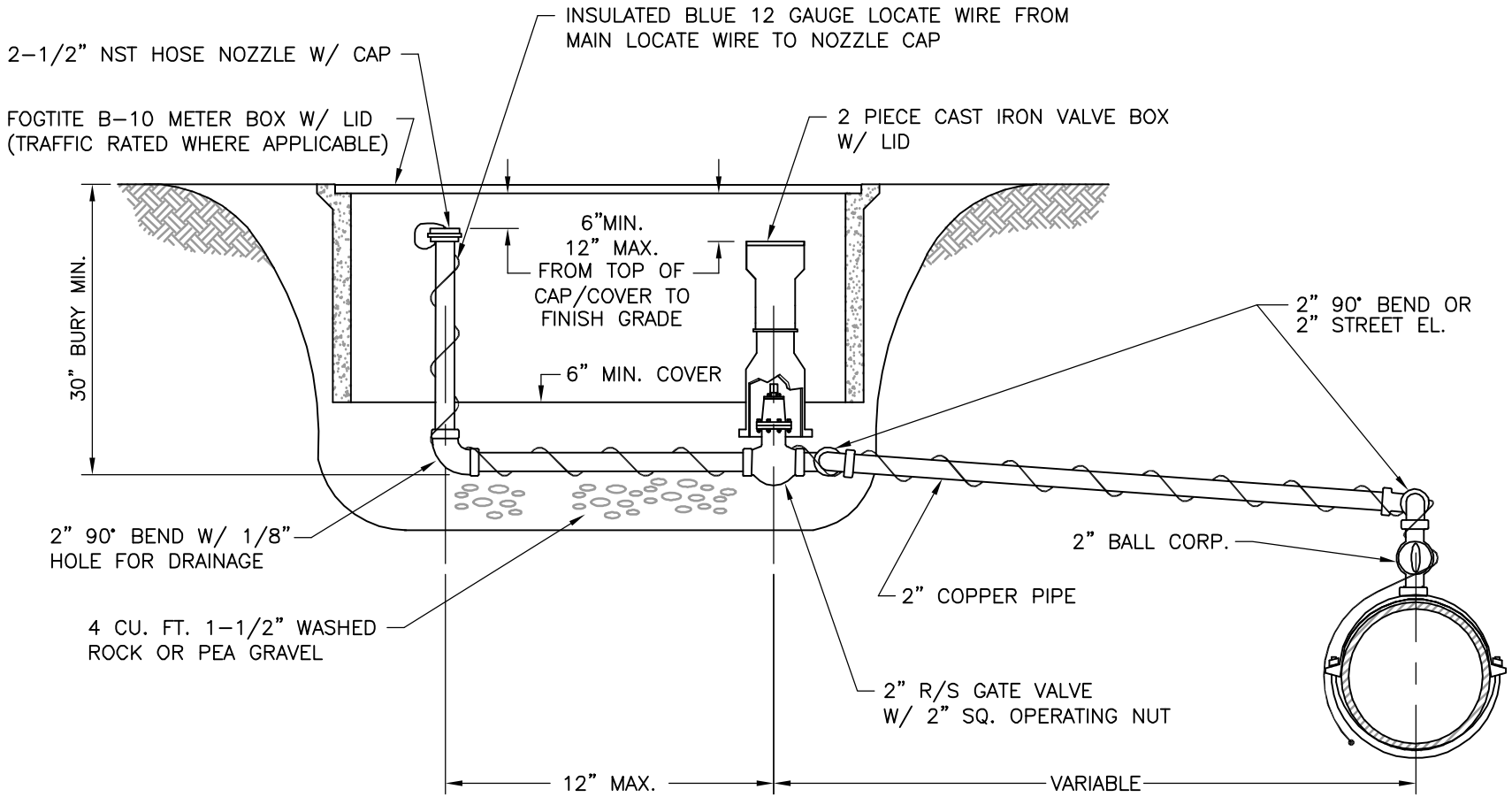

NOTES:

1. ALL BLOWOFF ASSEMBLIES SHALL BE TYPE K COPPER OR APPROVED EQUIVALENT.
2. SEE THRUST BLOCKING DETAIL FOR THRUST BLOCKING REQUIREMENTS.
3. KUFERLE FOUNDRY COMPANY MODEL #77 OR #78 MAINGUARD HYDRANT INSTALLED PER MANUFACTURER DETAIL MAY BE USED IN LIEU OF THE ASSEMBLY SHOWN HERE.
4. ALL BRASS AND BRONZE WATER SYSTEM COMPONENTS USED IN POTABLE WATER SUPPLY SYSTEMS, EXCEPT FOR SERVICE SADDLES, FIRE HYDRANTS, AND DISTRIBUTION MAIN GATE VALVES 2" IN DIAMETER OR LARGER, SHALL BE DEMONSTRATED TO HAVE BEEN TESTED AND CERTIFIED AS "LEAD-FREE" IN COMPLIANCE WITH THE REDUCTION OF LEAD IN DRINKING WATER ACT.

APPROVED
City of Oak Harbor
Engineering Dept.
Signature
2/24/14
Date

City of Oak Harbor
ENGINEERING DEPARTMENT
865 SE Barrington Drive
Oak Harbor, WA 98277

BLOWOFF ASSEMBLY (PERMANENT)

ACAD-W-1 Blow Off Assembly Perm.dwg

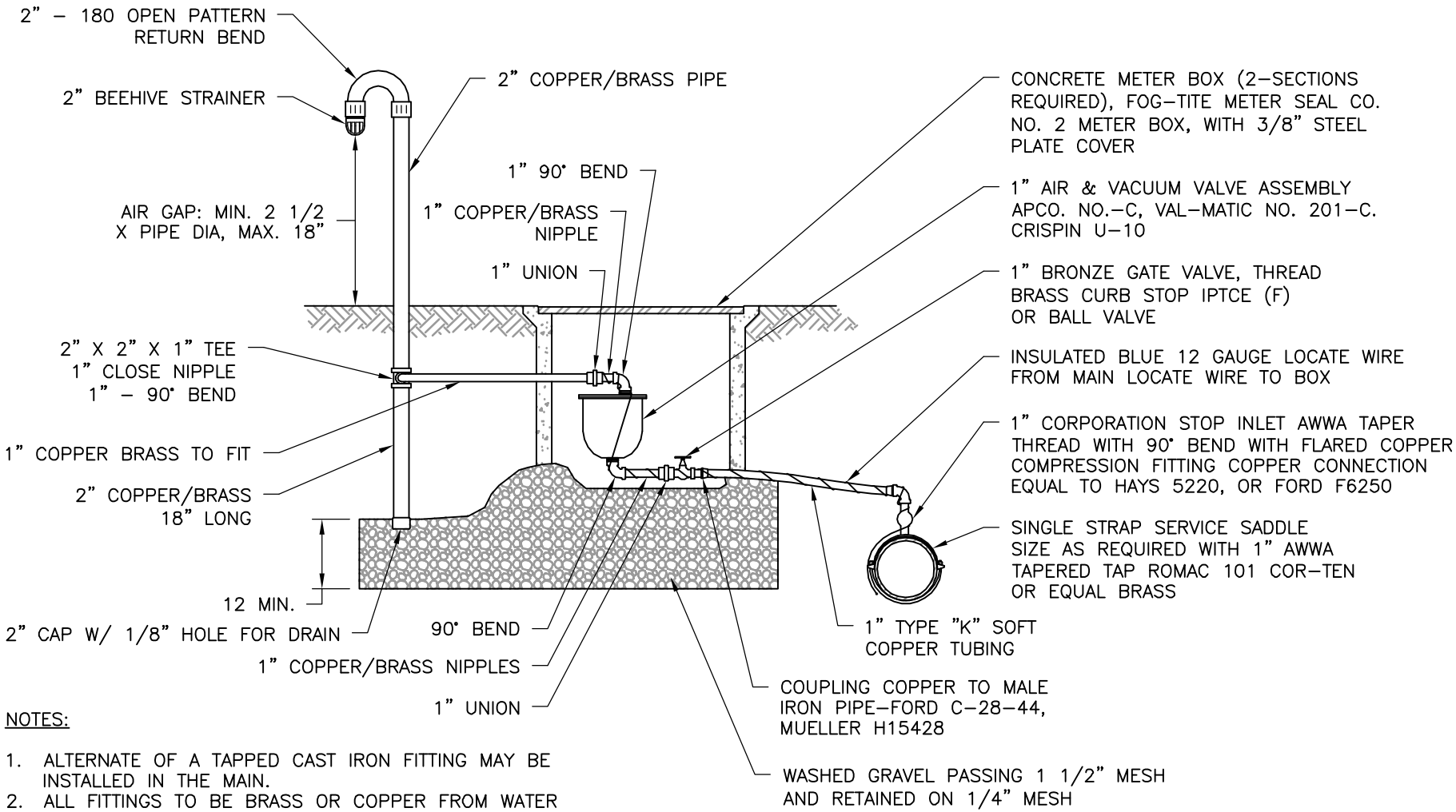

NOTES:

1. ALTERNATE OF A TAPPED CAST IRON FITTING MAY BE INSTALLED IN THE MAIN.
2. ALL FITTINGS TO BE BRASS OR COPPER FROM WATER MAIN TO 1" GATE VALVE.
3. AIR AND VACUUM RELEASE VALVE ASSEMBLY MUST BE INSTALLED AT HIGHEST POINT OF LINE. IF HIGH POINT FALLS IN A LOCATION WHERE ASSEMBLY CANNOT BE INSTALLED, PROVIDE ADDITIONAL DEPTH OF LINE TO CREATE HIGH POINT AT A LOCATION WHERE ASSEMBLY CAN BE INSTALLED.
4. ALL BRASS AND BRONZE WATER SYSTEM COMPONENTS USED IN POTABLE WATER SUPPLY SYSTEMS, EXCEPT FOR SERVICE SADDLES, FIRE HYDRANTS, AND DISTRIBUTION MAIN GATE VALVES 2" IN DIAMETER OR LARGER, SHALL BE DEMONSTRATED TO HAVE BEEN TESTED AND CERTIFIED AS "LEAD–FREE" IN COMPLIANCE WITH THE REDUCTION OF LEAD IN DRINKING WATER ACT.

APPROVED
City of Oak Harbor
Engineering Dept.
Signature
2/24/14
Date

City of Oak Harbor
ENGINEERING DEPARTMENT
865 SE Barrington Drive
Oak Harbor, WA 98277

AIR AND VACUUM RELEASE VALVE STANDARD

ACAD–W–7Air & Vacuum Release Valve.dwg

REVISED 1–6–14

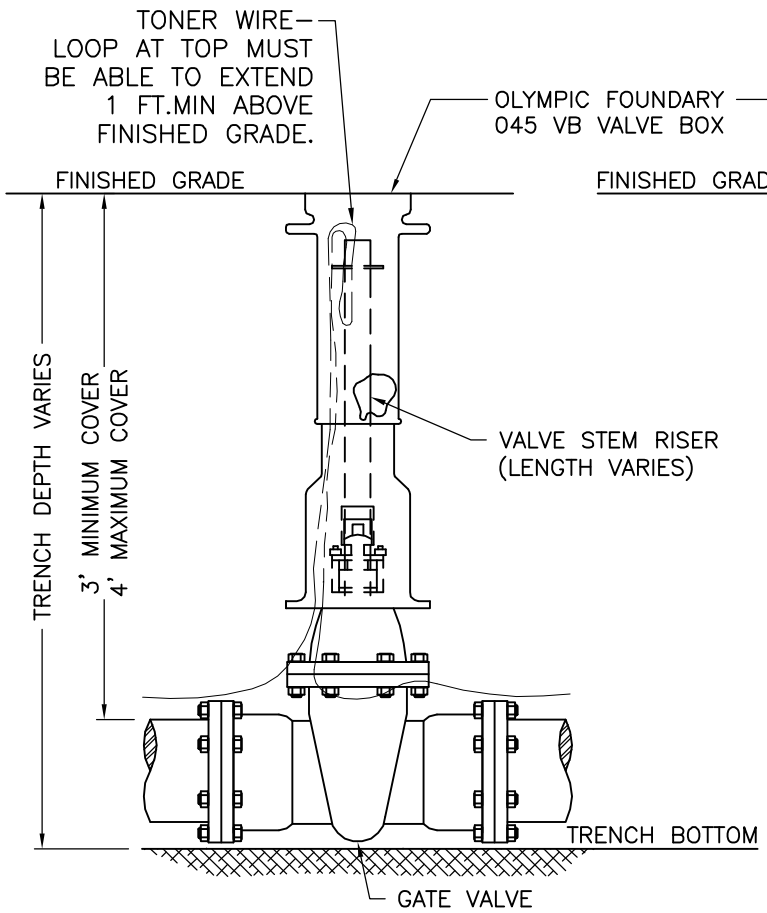

WATER VALVE DETAIL

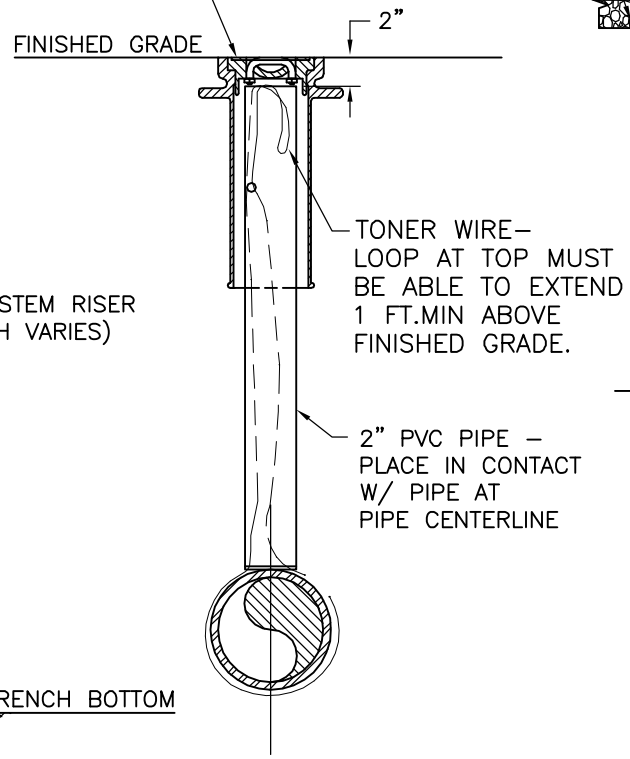

WATER LINE MARKER

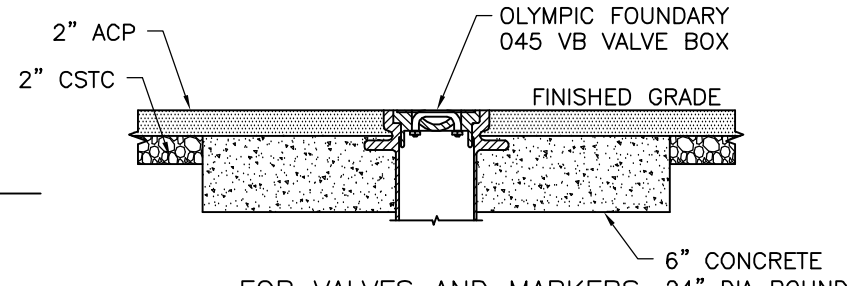

FOR VALVES AND MARKERS INSIDE PAVED AREA

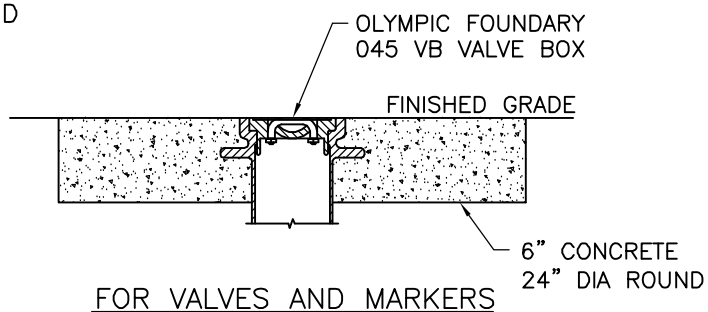

FOR VALVES AND MARKERS OUTSIDE PAVED AREA

VALVE STEM EXTENSION NOTES:

1. VALVE OPERATING NUT OR 1 7/8" X 1 7/8" X 2" GRADE STEEL WELDED TO GUIDE PLATE.
2. 3/16" THICK X 5 1/5" DIA STEEL GUIDE PLATE WELDED TO RISER SHAFT.
3. 2" X 2" X 3/16" SQUARE STRUCTURAL STEEL TUBING TO FIT OPERATING NUT. LENGTH AS REQUIRED.

APPROVED
City of Oak Harbor
Engineering Dept.
Signature
2/24/14
Date

GENERAL NOTES:

1. ALL VALVES MUST HAVE 12 GAUGE BLUE COATED COPPER TRACER WIRE TIED OFF AT VALVE BODY, EXTENDED OUTSIDE PVC RISER PIPE THEN EXTENDED ONE FOOT TOP OF VALVE BOX.

City of Oak Harbor
ENGINEERING DEPARTMENT
865 SE Barrington Drive
Oak Harbor, WA 98277

WATER LINE VALVE BOX AND MARKER

ACAD–W–12Waterline Valve Box and Marker.dwg

90° BEND

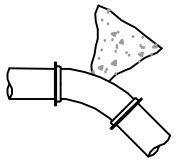

45° BEND

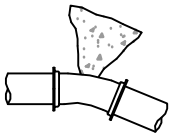

22 1/2° BEND

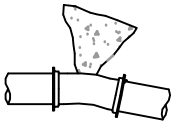

11 1/4° BEND

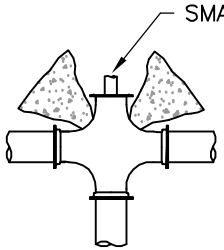

CROSS

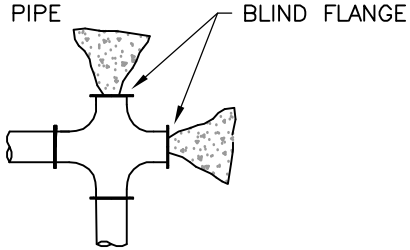

CAPPED CROSS

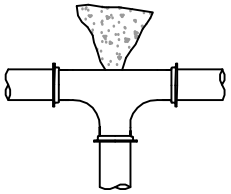

TEE

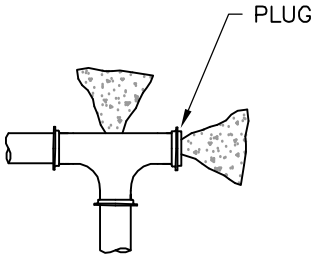

TEE

BEARING AREA OF BLOCK IN SQUARE FEET

FITTING SIZE (INCHES)	TEES & PIPE ENDS	90 BEND	45 BEND	22-1/2 BEND	11-1/4 BEND
100 PSF SOIL BEARING CAPACITY					
3	1.8	2.5	1.4	1.0	1.0
4	3.2	4.5	2.4	1.3	1.0
6	7.1	10.0	5.5	2.8	1.4
8	12.6	17.8	9.7	4.9	2.5
10	19.7	27.8*	15.1	7.7	3.9
12	28.3*	40.0*	21.7	11.1	5.6
14	38.5*	54.5*	29.5*	15.1	7.6
16	50.3*	71.1*	38.5*	19.7	9.9
2500 PSF SOIL BEARING CAPACITY					
3	1.0	1.0	1.0	1.0	1.0
4	1.3	1.8	1.0	1.0	1.0
6	2.9	4.0	2.2	1.1	1.0
8	5.1	7.2	3.9	2.0	1.0
10	7.9	11.2	6.1	3.1	1.6
12	11.4	16.0	8.7	4.5	2.3
14	15.4	21.8	11.8	6.1	3.1
16	20.2	28.5*	15.4	7.9	4.0

* MAXIMUM BEARING AREA ALLOWED IS 25 SQ.FT. BEARING AREA MAY BE REDUCED BY USING RESTRAINED JOINT PIPE OR BY CONDUCTING SOILS TESTS.

NOTES:

1. BLOCK HEIGHT SHALL BE EQUAL OR LESS THAN ONE HALF OF THE TOTAL DEPTH FROM GROUND SURFACE TO BLOCK BASE.
2. BLOCK SIZE BASED ON 250 PSI WATER PRESSURE AND 2500 PSI CONCRETE.
3. CONTRACTOR SHALL USE PLASTIC SHEETING TO PREVENT CONTACT BETWEEN PIPE FITTINGS, BOLTS AND CONCRETE BLOCKING.
4. NO BLOCKING MAY BE COVERED WITHOUT PERMISSION OF THE ENGINEER.
5. PIPE JOINT RESTRAINING SYSTEMS MUST BE APPROVED BY THE CITY ENGINEER PRIOR TO INSTALLATION.

APPROVED
City of Oak Harbor
Engineering Dept.

Signature

2/24/14
Date

City of Oak Harbor
ENGINEERING DEPARTMENT
865 SE Barrington Drive
Oak Harbor, WA 98277

THRUST BLOCKING (HORIZONTAL)

ACAD-W-4Horizontal Thrust Blocking.dwg

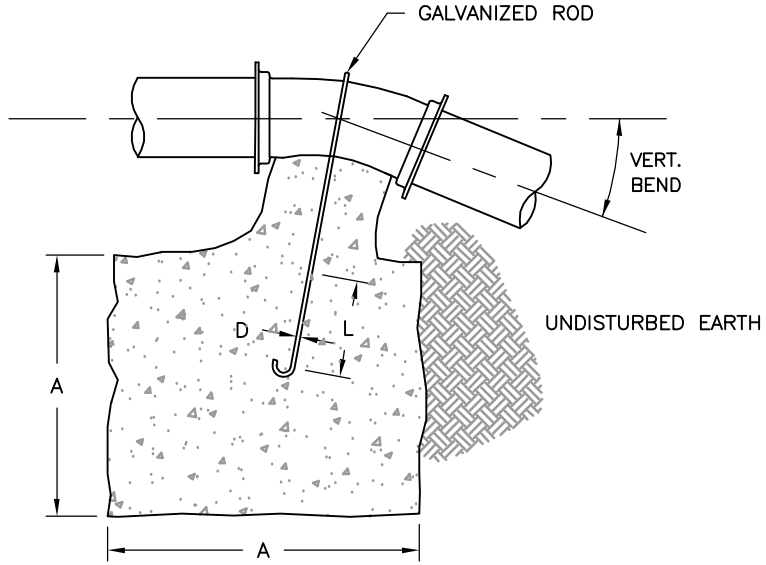

VERTICAL BLOCKING FOR
11 1/4° & 22 1/2° BENDS

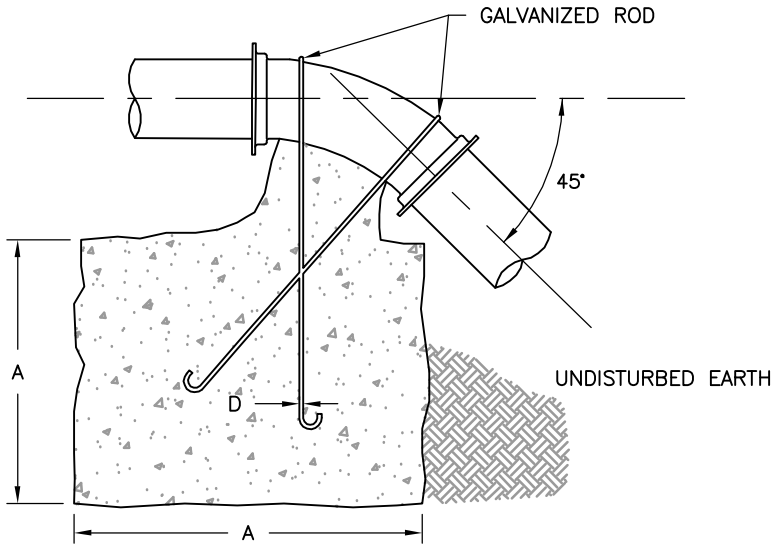

VERTICAL BLOCKING FOR
45° BENDS

VERTICAL BLOCKING FOR 11-1/4" & 22-1/2" BENDS

FITTING SIZE	BENDS	VOL. (CU. FT.)	A	D	L
4	11-1/4°	8	2.0'	3/4"	1.5'
	22-1/2°	11	2.2'		2.0'
6	11-1/4°	11	2.2'	3/4"	2.0'
	22-1/2°	25	2.9'		
8	11-1/4°	16	2.5'	3/4"	2.0'
	22-1/2°	47	3.6'		
12	11-1/4°	32	3.2'	3/4"	2.0'
	22-1/2°	88	4.5'	7/8"	3.0'
16	11-1/4°	70	4.1'	7/8"	3.0'
	22-1/2°	184	5.7'	1-1/8"	4.0'
20	11-1/4°	91	4.5'	7/8"	3.0'
	22-1/2°	225	6.1'	1-1/4"	4.0'
24	11-1/4°	128	5.0'	1"	3.5'
	22-1/2°	320	6.8'	1-3/8"	4.5'
VERTICAL BLOCKING FOR 45° BENDS					
4	45°	30	3.1'	3/4"	2.0
6	45°	68	4.1'	3/4"	2.0
8	45°	123	5.0'	3/4"	2.0
12	45°	232	6.1'	3/4"	2.5
16	45°	478	7.8'	1-1/8"	4.0
20	45°	560	8.2'	1-1/4"	4.0
24	45°	820	9.4'	1-3/8"	4.5

NOTES:

1. BLOCK HEIGHT SHALL BE EQUAL OR LESS THAN ONE HALF OF THE TOTAL DEPTH FROM GROUND SURFACE TO BLOCK BASE.
2. BLOCK SIZE BASED ON 250 PSI WATER PRESSURE AND 2500 PSI CONCRETE.
3. CONTRACTOR SHALL USE PLASTIC SHEETING TO PREVENT CONTACT BETWEEN PIPE FITTINGS, BOLTS AND CONCRETE BLOCKING.
4. NO BLOCKING MAY BE COVERED WITHOUT PERMISSION OF THE ENGINEER.
5. PIPE JOINT RESTRAINING SYSTEMS MUST BE APPROVED BY THE CITY ENGINEER PRIOR TO INSTALLATION.

APPROVED
City of Oak Harbor
Engineering Dept.

Signature

2/24/14
Date

City of Oak Harbor
ENGINEERING DEPARTMENT
865 SE Barrington Drive
Oak Harbor, WA 98277

THRUST BLOCKING (VERTICAL)

ACAD-W-5Vertical Thrust Blocking.dwg