Marina Advisory Committee

June 6, 2016

CITY OF
Oak Harbor
WHIDBEY ISLAND, WASHINGTON

Marina Advisory Committee Meeting
June 6, 2016
7:00 p.m.

Committee Members
Ken Hulett, Chairman
J.J. Jones, Vice-Chairman
Mahmoud Abdel-Monem
Jeff Malmgren
Open Position

1. Public Comment
2. Review of the May 2, 2016 meeting notes
3. Launch Trailer Options – Information
4. Fuel Pricing Formula – Discussion
5. General Update
6. Marina Advisory Committee Comments
7. Next Meeting – July 11, 2016
8. Adjourn

April 2016 Occupancy

Based upon Marina Program Reports

Permanent Moorage

Dock	Total Slips	Total Occupied	Total Vacant	Percent Occupied
A	54	46	8	85%
B	82	73	9	89%
C	55	52	3	95%
D	85	44	41	52%
E	71	55	16	77%
Totals	347	270	77	

- There were 13 more slips occupied in April than in March.
- The permanent moorage docks were 78% occupied.
    - +4% compared to March.
      +3% compared to April 2015.

Conditional Moorage

Dock	Total Slips	Total Occupied	Total Vacant	Percent Occupied
G	16	12	4	75%
F	52	37	15	71%
S	8	8	0	100%
Totals	76	57	19	

- There were 8 fewer slips occupied in April than in March.
- The conditional moorage docks were 75% occupied.
    - -11% compared to March.
    - +13% compared to April 2015.

Overall Summary

- The combined permanent and conditional moorage marina docks were 77% occupied in April.
    - +1% compared to March.
    - +5% compared to April 2015.
- The average percentage of occupancy on each dock was 81% in April.
    - +2% compared to February.
    - +6% compared to April 2015.

Review of Meeting Notes

May 2, 2016

CITY OF
Oak Harbor
WHIDBEY ISLAND, WASHINGTON

City of Oak Harbor **May 2, 2016**
Marina Advisory Committee 7:00 p.m.
Regular Meeting Agenda Oak Harbor City Hall

Roll Call: Mr. Hulett __X__ Mr. J. Jones __X__ Mr. Abdel-Monem _X_ Mr. Malmgren ____ Open Position ____

Staff: Steve Powers

Public: Byron Skubi

1. Public Comment:
   None.

2. Review of the April 4, 2016 Meeting Minutes:
   Approved as written.

3. Whidbey Island Launch Options – Discussion
   Mr. Hulett introduced the agenda item and asked how important the hoist was for Race Week. Mr. Skubi stated that 10% of entrants need the hoist (7 out of 70 boats). Some participants will be lost because of the hoist. Mr. Powers presented the agenda item.

   Discussion
   The Committee discuss the viability and cost of the various options and came to a consensus that reimbursement of moorage fees not-to-exceed $150 was the best option.
   Action
   A motion was made to move forward with the reimbursement model with a not-to-exceed cost of $150 per boat for Race Week 2016.
   The motion was voted on and approved unanimously.

4. Hoist Repair Options – Discussion
   Mr. Powers presented the agenda item and reviewed the identified structural issues. In-house estimate for repair is $200,000. The options are: purchase a travel lift/trailer, don't repair the hoist, or repair the hoist. Mr. Powers suggested considering whether the hoist should be repaired first.

   Discussion
   The Committee discussed about different types of travel lift/trailers and viable options for using the ramp and not using the hoist deck, options for funding the project, just repairing the head end, the first 30 feet, so that a boat could be lifted up off a trailer. Mr. Powers will ask the consultants about just repairing the first 30 feet.

   Action
   A motion was made to not repair the entire hoist and explore preserving the overland portion of the hoist. The motion was voted on and approved unanimously.

5. General Update:
    - Traffic access lane – Mr. Powers reported that he spoke with the City Engineer and asked if staff time could be allocated to examining the issue and he has done so.

6. MAC Comments:
    - Asked for an update on the traffic backup getting into the marina. The City Engineer is aware of the issue and will be assigning someone to look into the options.
    - Hydro Races are back on for August 13 and 14. The intent is to have the pits at Flintstone Park and have minimal impact on the Marina.
    - Suggested sending a thank you letter to Bob Nelson for his service on the Marina Advisory Committee to be signed by the Mayor.
    - Need to have someone volunteer for running for the election of co-chairperson at the next meeting, J.J. volunteered and it will be added to the next agenda.
    - Discussed Marina finances and the possibility of asking the Finance Director to prepare a profit and loss statement for the Marina quarterly or at least annually

7. Next regular meeting— June 6, 2016

8. Adjourn

Launch Trailer Options

Information

City of Oak Harbor
Oak Harbor Marina

Memo

To: Marina Advisory Committee

From: Chris Sublet, Harbormaster

CC: Steve Powers, Director Development Services

Date: 6/6/2016

Re: Boat Launch Options - Information

During the May 2, 2016 Marina Advisory Committee meeting the Committee members made a recommendation to not repair the hoist. The Committee did determine that a method for the marina to launch and retrieve boats is necessary and beneficial to marina tenants and guests. The Committee asked staff to look into which options were available that may work with our unique launch ramp.

Staff has explored several options and has identified three options that may work well with the marina's launch ramp. These options are listed in the table below and include a hydraulic trailer, large forklift and a Conolift Sling Hoist. The table also includes information on a "yard truck" to pull the trailer type options. The options are not listed in any particular order.

Item	Attachment	Estimated Cost	Notes
Hydraulic Trailer	A	$60,000- $100,000	• Similar to what Mariners Haven currently uses. • May be limited to using only at higher tides. • Self-propelled models are available for an additional cost. • May require a section of the hoist to be repaired to lift boats to and from their road trailers.
Forklift	B	$130,000 - $275,000	• May be limited to using only at higher tides. • May require a trained or skilled operator. • May require a section of the hoist to be repaired to lift boats to and from their road trailers.
Conolift Sling Hoist	C	$32,000 - $61,000 (base price)	• May be able to use at any

			tide. • May be able to transfer boats to and from their road trailers. • Self-propelled models are available for an additional cost.
Yard Truck	D	$35,000	• May require a Washington CDL.

There may be some additional expenses involved with blocking and securing boats. These additional expenses may include boat stands, dunnage, chains and staff time to perform the actual hauling and blocking.

Staff will keep the Marina Advisory Committee updated as we work through the potential solutions and visit marinas and boat yards that use the different options. In order for the Committee members to make the best recommendation possible, they will be invited to visit the sites using the various options.

If you have any questions, please do not hesitate to contact Chris Sublet at (360)279-45676.

MARITIME
BOAT TRANSPORTATION :: MARINA AND BOATYARD EQUIPMENT
TEL: 508-758-9409 | FAX: 508-758-4014

2001 Con O Lift OTR-20

Description:
20 Ton Over the road.Power and sail to 45 feet.Air Ride suspension.Galvanized FRAME.6 Telescoping arms.Hydraulic Landing wheels for ramp.Remote control on all hydraulic functions and air bags.Trailer was used for local work.Rear Pads swivel 180 degrees. has spare tires and parts. new oak cross beams..Located in Maine..Ready to work

Price: $60000

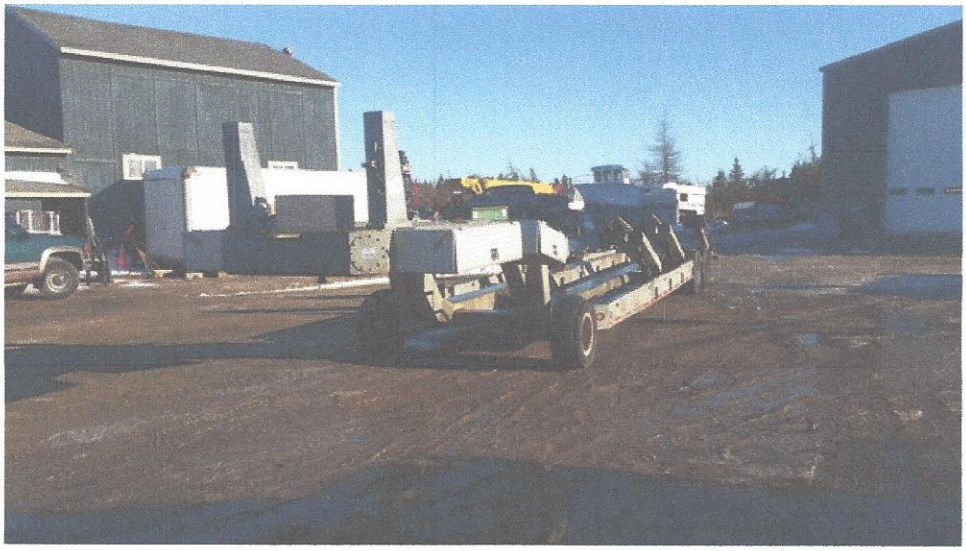

Attachment A

Attachment A

Enter your comments/questions in the space provided below:

Name

E-Mail

State/Location

Telephone

Fax (if any)

Enter **Anti-Spam Code:** [HT4K] *Required

Send this Email | Reset

BOAT TRANSPORTATION | AUTO & FREIGHT TRANSPORT | MARINA & BOATYARD EQUIPMENT

7 Maplewood Street, Mattapoisett, MA 02739
TEL: 508-758-9409 | FAX: 508-758-4014 |EMAIL: boattransport@comcast.net
© Maritime - Boat Transporation and Marina & Boatyard Equipment. All Rights Reserved.

Attachment A

Find Sell

Research

MyTrader Login Register | Dealer Login

Lifting Forklifts Wiggins W300m-2 Florida 33315

WIGGINS W300M-2 FORKLIFTS in FT. LAUDERDALE, FL

FINANCE SHARE THIS CONTACT SELLER

View Larger

Contact this seller now: 350 (888)

THE REVOLUTION IS HERE.
WIGGINS MARINA BUILT 2

Price: $275,000

Great Value

Specification

Make:	WIGGINS
Model:	W300M-2
Class:	LIFTING
Category:	Forklifts
Engine Make:	Perkins
Capacity (Lbs):	30000 pounds
New/Used:	U
See More Info:	Additional Details from the Dealer

More

Features

Forks

Description

30,000Lb Capacity Wiggins Marina forklift with 30 positive and 12 negative lift. 22 Swing Forks. Available now.

About This Dealer

Family owned and operated for 25 years. Specialize in reconditioned construction, warehouse and marina forklifts.

Seller Information

Worldwide Forklifts

350-9144

(888)

Reference Stock #: 19650

268 S.W. 32 Court
Ft. Lauderdale, FL
33315 (Map)

See All Inventory | Visit Dealer Web Site

Out of this WORLD products at down to Earth PRICING !!!

Contact Seller

*required

Attn: Worldwide Forklifts

Attachment B

WIGGINS WD200M2 FORKLIFTS in FT. LAUDERDALE, FL

FINANCE SHARE THIS CONTACT SELLER

View Larger

Contact this seller now: 350 ... (888)

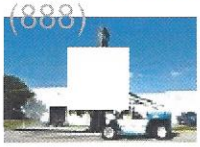

More

Features

Forks

Description

20,000Lb Wiggins Marina forklift with 42 positive lift and 12 negative lift. 20 forks with new non mark rubber covers. Swing fork carriage. Fully serviced and reconditioned plus new tires, paint OSHA and Wiggins decals. 48 month lease available to qualified buyer. New arrival. Sample photo.

About This Dealer

Family owned and operated for 25 years. Specialize in reconditioned construction, warehouse and marina forklifts.

Price: $145,000

Great Value

Specification

Make:	WIGGINS
Model:	WD200M2
Class:	LIFTING
Category:	Forklifts
Engine Make:	Deutz
Capacity (Lbs):	20000 pounds
New/Used:	U
Price:	$145,000

Seller Information

Worldwide Forklifts

350-9144

(888)

Reference Stock #: 19800

268 S.W. 32 Court
Ft. Lauderdale, FL
33315 (Map)

See All Inventory | Visit Dealer Web Site

Out of this WORLD products at down to Earth PRICING !!!

Contact Seller

*required

Attn: Worldwide Forklifts

Hello, I'm interested in your WIGGINS

Attachment B

MARITIME
BOAT TRANSPORTATION :: MARINA AND BOATYARD EQUIPMENT
TEL: 508-758-9409 | FAX: 508-758-4014

2001 Wiggins W420YXL

Description:
Refurbished Machine in Excellent Condition.Industrial LIFT..Can pick up 42,000# at a 36 inch load center to 20 feet. 96 inch pallet type forks..Side Shift and Fork Positioners..Cummins Turbo Diesel 6 Cyl. 196 in Turning radius..Solid tires approx 8200 hours..Located in CA

Price: $130000

Attachment B

Conolift Sling Hoist

Standard Capacities & Features

- Capacity (size)
  - Powerboats to 46' LOA
  - Sailboats to 48' LOA and 6' 6" draft
- Capacity (weight) - 40,000 lbs (Off-road only)
- 10" x 10" x .500" HSS steel tube frame
- Hydraulic expanding width frame
  - expands from 10' to 14'6" inside of slings
  - expands from 89" to 143" inside of tires
- Hydraulic tongue with 5' extending(manual) pintle ring
- Hydraulic lift:
  - wheel and tongue lift with frame heights to 58"
  - Sling lift of an additional 36" of lift
- Hydraulic Power
  - 9 HP Honda with electric start and 2 stage pump
  - 10 gallon hydraulic reservoir

Attachment C

- Wireless radio remote control
- Pilot operated safety lock-valves on all lift functions
- 4 hydraulic sling posts with 36" of lift each
    - Front sling has hydraulic adjustment fore and aft 10' to 16' on centers
    - 2 center-disconnect slings with hull protector pads
- Tires:
    - 28" premium solid wide-trac Titan tires (outside)
    - 22" premium solid wide-trac Titan tires (inside)
- Complete sandblast to white metal, **1 coat zinc primer, 1 coat epoxy high build primer**
- Polyurethane paint - **2 coats** of **Conolift Red** PPG commercial performance paint
- 2 year warranty on frame, 2 years on hydraulic components with 90 days limited warranty on running gear

Optional Equipment

- Custom colour choice - 189 colors to choose from
- Hitch with 5' hydraulic extending pintle ring
- Self-propelled power unit
- Salt water package - consisting of :
    - Hot-dipped galvanized frame and components
    - Stainless steel hose ends and fittings, hydraulic cylinder shafts

Conolift reserves the right to change specifications or substitute components as required in an effort to supply a better product in an ever changing marketplace.

KROPF INDUSTRIAL INC — CONOLIFT AQUACULTURE MARINE

CONOLIFT

#1 Quebec Drive, Seguin, ON P2A 0B2 Tel 888-480-3777 Fax 705-378-5068 Email sales@conolift.com

SL-20 MARINE HYDRAULIC SLING LIFT YARD TRAILER

Effective Date: 20-Nov-15

Standard Capacities & Features

Capacity (size)..... Powerboats to 46' LOA
Sailboats to 48' LOA and 6' 6" draft

Capacity (weight)..... 40,000 lbs off-road only

10" x 10" x .500" HSS steel tube frame

Hydraulic expanding width frame (expands from 10' to 14' 6" inside of slings)
(expands from 89" to 143" inside of tires)

Hydraulic tongue with 5' extending(manual) pintle ring

Hydraulic lift - wheel and tongue lift with frame heights to 58"
- Sling lift of an additional 36" of lift

Hydraulic Power 9 HP Honda with electric start and 2 stage pump
10 gallon hydraulic reservoir

Wireless radio remote control

Pilot operated safety lock-valves on all lift functions

4 hydraulic sling posts with 36" of lift each
Front sling has hydraulic adjustment fore and aft 10' to 16' on centers
2 center-disconnect slings with hull protector pads

Tires: 28" premium solid wide-trac solid Titan tires (outside)
22" premium solid wide-trac solid Titan tires (inside)

Complete sandblast to white metal, **1 coat zinc primer, 1 coat epoxy high build primer**

Polyurethane paint - **2 coats** of **Conolift Red** PPG commercial performance paint

2 year warranty on frame, 2 years on hydraulic components with 90 days limited warranty on running gear

Base price F.O.B. Parry Sound, Ontario, Canada: $60,560.00

Optional Equipment

Custom PPG colour choice - 189 colors to choose from	$445.00
Black or white decal (company name & telephone number) on both sides of unit	$305.00
Hitch with 5' hydraulic extending pintle ring	$4,245.00
Self-propelled power unit	By Quote
Salt water package - consisting of :	$11,940.00
Hot-dipped galvanized frame and components	
Stainless steel hose ends and fittings, hydraulic cylinder shafts	

Prices are subject to change without notice. Conolift reserves the right to change specifications or substitute components as required in an effort to supply a better product in an ever changing marketplace.

Attachment C

KROPF INDUSTRIAL INC — CONOLIFT AQUACULTURE MARINE

CONOLIFT

#1 Quebec Drive, Seguin, ON P2A 0B2 Tel 888-480-3777 Fax 705-378-5068 Email sales@conolift.com

Y-20 MARINE HYDRAULIC YARD TRAILER

Effective Date: 20-Nov-15

Standard Capacities & Features

Capacity (size)..... Powerboats to 46' LOA
Cradled sailboats to 48' LOA

Capacity (weight)..... 40,000 lbs off-road only

10" x 10" x .500" HSS steel tube frame

Hydraulic expanding width frame (expands from 68" to 98" inside)

Hydraulic tongue with pintle ring

Hydraulic lift - wheel and tongue lift with frame heights to 55"

Hydraulic Power: 6.5 HP Honda gasoline engine

Pilot operated safety lock-valves on main frame lift

Hydraulically operated rear keel support strap

8 adjustable powerboat pads; 3 telescopic cradle bars with fixtures

O-ring boss and JIC hydraulic fittings

Zinc coated steel hose ends and fittings

High strength hydraulic cylinder shafts

Stainless steel hardware (nuts/bolts/pins)

Walking beam suspension

Tires: 28" premium wide-trac solid Titan tires

Complete sandblast to white metal, **1 coat zinc primer, 1 coat epoxy high build primer**

Polyurethane paint - **2 coats** of **Conolift Red** PPG commercial performance paint

3 year warranty on frame, 2 years on hydraulic components with 90 days limited warranty on running gear

Base price F.O.B. Parry Sound, Ontario, Canada: $32,610.00

Optional Equipment

Custom PPG colour choice - 189 colors to choose from			$445.00
Black or white decal (company name & telephone number) on both sides of unit			$305.00
"L" cradle arms for more efficient cradle moving		Set of 4	$915.00
		Set of 6	$1,340.00
Rear 4-pad equalizing rocker system			$1,205.00
Stainless steel hose ends & fittings package		Base Trailer	$2,625.00
		With Sail Arms	$3,870.00
Wireless remote control	6 Functions	Base Trailer	$5,380.00
	10 Functions	With Sail Arms	$6,845.00
Electric/hydraulic brake package - drum brakes			$8,070.00
Suspension package (includes fenders and lights)			$3,085.00
Hot dip galvanized frame and hubs		Base Trailer	$6,695.00
		With Sail Arms	$7,315.00
Hydraulic 4-arm package for handling non-cradled sail boats			$12,100.00

Prices are subject to change without notice. Conolift reserves the right to change specifications or substitute components as required in an effort to supply a better product in an ever changing marketplace.

Attachment C

Semi Trailer Services
Sales Semi-Trailer Big Box
750A Hurricane Shoals Rd NE
Atlanta (Lawrenceville), Georgia 30043

800-992-1418
Email
See all inventory

2007 Ottawa COMMANDO

Price:

$35,500

Condition:
Used
Stock#:
07-YS-OT-GB-ATL
Listing#:
369183
Type:
Truck
Category:
Yard
Location:
Atlanta (Lawrenceville), Georgia
Mileage:
73,008 (0 ECM)

ROAD & DOT LEGAL - NOT FROM A PORT OR RAILROAD - OTTAWA Y-30 COMMANDO - CUMMINS ASB07 - 200 HP - AUTOMATIC ALLISON GEN 4 TRANSMISSION 3000RDS - WHEELBASE 116 - RATIO 7.17:1 - MERITOR FF-961 FRONT AXLE – AIR CONDITIONING - ENGINE BLOCK HEATER - HEATED FUEL WATER SEPARATOR - BENDIX/WESTINGHOUSE AD-9 AIR DRYER - HEATED MIRRORS – RAISED ROOF CAB – STROBE LIGHT- 21,000 HOURS - SOUTHERN TRUCK - WON'T LAST LONG AT THIS PRICE - MUST SEE! - CALL GARY TODAY AT 404-697-1164.

Ratio:7.17:1; **Wheel Base:**116; **Power Steering:**Yes; **Tire Size:**11R22.5; **Air Conditioning:**Yes ; **Engine Horsepower:**200; **Road Legal:**Yes; **Premium Stereo:**No; **Engine Model:**ASB07; **Abs:**No ; **Suspension Type:**Spring; **Structural Damage:**No; **Power Window Passenger:**No ; **Air Ride Driver Seat:**No; **Gvw:**Class 4-6; **Transmission Make:**Allison; **Heated Mirrors:**Yes ; **Sunvisor:**No; **AM/FM:**No; **Brake Condition:**Brakes Pass DOT; **Mp3:**No; **Compact Disc:**No ; **Engine Brake:**No; **Engine Make:**Cummins; **Color:**White

Attachment D

verizon✓ Manage Your Fleet From Your Seat
Verizon Networkfleet
See How

All information listed is believed accurate. Pictures, specifications, prices, and all information is subject to change and correction without notice. All liability is expressly disclaimed.

Attachment D

Ottawa 4x2
Off Road
Standard Specifications

4X2 YARD TRACTOR

STANDARD FEATURES

- Cummins Tier 3 QSB6.7-160 HP @2200 RPM, 540-lb/ft torque @1500 RPM Electronic-CAC with primary fuel filter
- Allison 3000RDS Transmission (3 speed)
- Front Axle: Meritor FF-961, 12,000 lb
- Rear Axle: Meritor RS-23-186, 7.83:1 ratio, solid mount to frame
- 110" Wheelbase with "L" frame reinforcement
- Fifth wheel: Holland FW-3500, 70,000 lb plate rating
- Fifth wheel lift cylinders: 5" diameter 60,000 lb rating
- Tires 11R22.5 Steel belted radials 14PR
- Wheels 22.5" X 8.25" 285 mm hub piloted, 10 hole steel disc
- Vertical exhaust system with heat shield
- Air cleaner, frontal inlet
- Back-up light, stop and turn signals
- Step - battery box 16" wide
- Cab side vent (riveted)
- Drive shaft Spicer 1710 series
- Approximate Vehicle Weight 14,500 lb
- GCWR 96,000 Lbs
- Maximum Ground Speed 25 MPH

TRAILER EQUIPMENT

- Two (2) color coded, coiled air lines with glad hand receivers, 7 wire female receptacle at rear of cab

STEERING

- Gearbox type integral power steering with mechanical back up
- Constant running PTO/pump with priority steering circuit

CAB FEATURES

- Cab air ride, 3-point mount suspension
- Cab with raised roof: 50" X 65" X 68" welded steel and driver's side door which has a full length piano hinge and an aluminum sliding rear door
- Cab insulation, for thermal protection and noise abatement
- Cab tilt: Electric 45° with 90° tilt capability
- Platform, rear of cab
- Air Ride Seat with isolator
- Seat belt with 2-point mount
- Tinted glass all windows
- 40,000 BTU fresh air heater/defroster
- West coast 16" X 7" mirrors

Cab gauges:
Volt meter, oil pressure, water temperature, fuel level, air pressure, speedometer and 5-digit hour-meter

Cab controls:
Accelerator, tractor/trailer brakes, gear selector, fifth wheel elevation, steering wheel 18" soft touch, headlights, electric horn, heater defroster and electric windshield wiper control, directional turn signals, rear flood light upper right hand side, 5th wheel unlatch

WARNING DEVICES

- Low air pressure light and alarm
- Transmission high oil temperature warning
- Headlight hi-beam indicator
- Electric backup alarm

Ottawa 4x2 Off Road

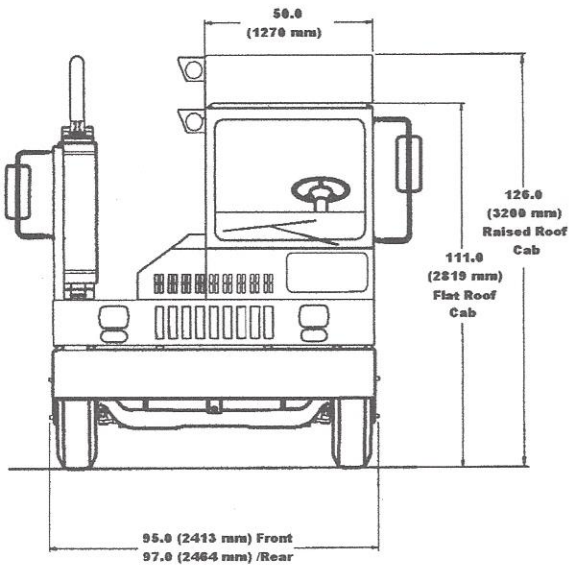

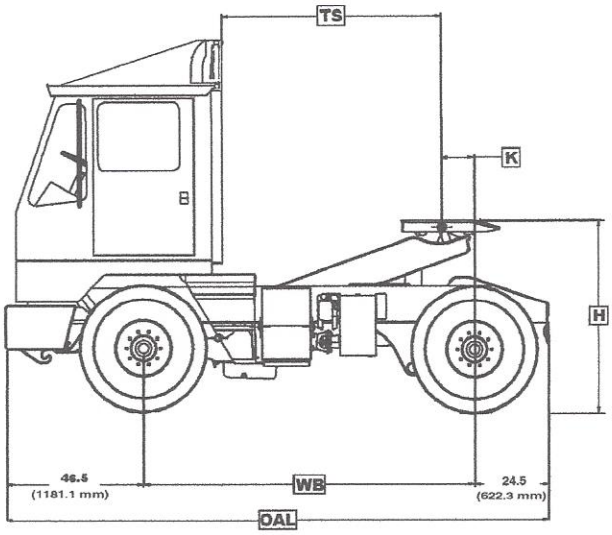

		BOOM POSITION STANDARD LIFT	
WB	DIM	UP	DOWN
110" (2794 mm)	TS	73.4 (1863 mm)	77.5 (1958 mm)
	K	10.2 (259 mm)	6.1 (154 mm)
	H	63 (1600.2 mm)	46 (1168.4 mm)
	OAL	181 (4597.4 mm)	

HYDRAULIC SYSTEM

- 16 gallon tank with sight glass
- 10 GPM pump
- 5" hydraulic lift cylinders
- Hydraulic system fittings with "O" Ring
- 5th Wheel Boom lift 17"

BRAKES

- Front: "S" Cam type 16.5" X 5" air actuated
- Rear "S" Cam type 16.5" x 7" air actuated
- Manual slack adjusters front and rear

FRAME FEATURES

- Welded 50,000 psi steel with 12" x 3 3/8" X 3/8" formed channel 43.25" wide frame with "L" frame reinforcement (1,835,000 in/lb RBM)
- 55° tapered deck curbside with reinforced removable bumper
- 50-gallon frame mounted round fuel tank, curbside
- Integral front and rear tow eyes

PNEUMATIC SYSTEM

- 15.2 CFM Wabco compressor with 2-tank air reservoir system total capacity 3582 cu. in.
- Color-coded air lines

ELECTRICAL SYSTEM

- 12 Volt neg. ground with circuit breakers, 130-amp minimum charge alternator, color coded wiring in separate removable harness, 12-volt starter with positive engagement, two (2) 12-volt low maintenance batteries, cab dome light

PAINT FINISH

- Cab: white DuPont Imron 5000
- Chassis and components powder coated primer, top coated with polyurethane, paint black
- Wheels: Paint "E" coat white
- Rubberized undercoating under cab and deck

Kalmar Industries Corp. • Ottawa Truck • 415 East Dundee Street • Ottawa KS. 66067 • Tel 785-242-2200 • Fax 785-242-8573

Effective Date: 7/10/06
Order Receipt

Attachment D

Fuel Pricing Formula

Discussion

City of Oak Harbor
Oak Harbor Marina

Memo

To: Marina Advisory Committee

From: Chris Sublet, Harbormaster

CC: Steve Powers, Director Development Services

Date: 6/6/2016

Re: Fuel Pricing Formula Review - Discussion

At a recent Marina Advisory Committee meeting the Committee members questioned if the fuel pricing formula put into place in 2012 is still competitive and fully covers all costs associated with the selling of fuel. They have asked that the pricing formula be revisited and added to an upcoming Marina Advisory Committee meeting agenda.

The current fuel pricing formula is a flat rate formula that includes the cost, delivery fee (gas only) and tax (diesel only). The price of fuel is only changed when a delivery is received.

Diesel formula:

(Cost+ $0.40) X 1.087(tax) = retail price per gallon

Gas formula:

Cost + $0.40 +$0.03 (delivery fee) = retail price per gallon

The Marina currently offers two discounts on fuel. The first discount is $0.05 per gallon, for purchases over 100 gallons and is available for both marina tenants and guests. The second discount is $0.20 per gallon, up to the amount paid for the first night of guest moorage and is only available to marina guests.

The tables below displays fuel sale information for 2014 and 2015. The “Cost” column only displays the cost of fuel (based on the actual invoices), and does not include fuel pump maintenance, fuel dock maintenance or the cost of staff time to monitor the fuel sale.

Diesel

Year	Revenue	Cost	Gallons Sold
2014	$259,830.10	$226,153.60	77,291
2015	$231,857.77	$187,923.37	109,746

Gas

Year	Revenue	Cost	Gallons Sold
2014	$135,613.60	$119,272.81	31,675
2015	$125,162.86	$105,715.91	36,612

FINE EDGE
Nautical & Recreational Publishing

FUEL PRICE SURVEY 5/17/2016

Marina	*Phone #*	*Gas*	*Diesel*	*Website*
OLYMPIA				
Olympia Boston Harbor Discount for purchases using cash or check when purchasing 100+ gallons, or members of the Olympia YC or BoatUS. Gas is ethanol free.	360-357-5670	$3.00	$3.50	www.bostonharbormarina.com
SOUTH PUGET SOUND				
Jarrell's Cove Marina Quantity disocounts available. Gas is ethanol free.	360-426-8823	$4.08	$3.50	
Fair Harbor Marina - Grapeview	360-426-4028	$3.25	No Diesel	www.fairharbormarina.com
TACOMA AREA				
Tacoma Fuel Dock Gas is ethanol free.	253-383-0851 100-199 Gal. 200-499 Gal. Over 500 Gal	$2.94 $2.89 $2.84 $2.82	$1.97 $1.92 $1.87 $1.85	http://cbmsi.com/fuel.htm
Foss Harbor Marina	253-272-4404	$3.01	$2.07	
Narrows Marina Discount of 2% for cash. Gas is ethanol free.	253-564-3032	$3.61	$2.40	
HOOD CANAL				
Brinnon Pleasant Harbor Gas is ethanol free.	360-796-4611	$3.91	$2.81	www.pleasantharbormarina.com
Hood Canal Marina*	360-898-2252	N/A	N/A	
SOUTH SEATTLE/DES MOINES				
Des Moines Gas is ethanol free.	206-824-5700 (Ext #3)	$2.95	$1.86	www.desmoineswa.gov
SEATTLE				
Elliott Bay Quantity disocounts available. Gas is ethanol free.	206-282-8424	$3.68	$2.57	www.elliottbaymarina.net
Morrison's Northstar Marine (Lake Union) Gas is ethanol free.	206-284-6600	$3.99	$3.27	
Seattle Boat Newport NEW! Diesel happy hour, Mon-Thu 0800-1400, $1.96/gal	425-641-2090	$3.98	$3.38	www.seattleboat.com
Yarrow Bay (Kirkland) (Ext #4) Gas is ethanol free.	425-822-6066	$4.24	$3.80	www.yarrowbaymarina.com/
Kenmore North Lake Marina Supreme available, both grades ethanol free.	425-482-9465	$3.72/$4.17	No Diesel	www.northlakemarina.com
Shilshole Gas is ethanol free.	206-783-7555	$3.79	$2.69	www.portseattle.org
Covich-Williams 10¢/gal discount for cash and check; ask about quantity discounts. Gas is ethanol free.	206-784-0171	$3.36	$2.26	www.covichwilliams.com

BREMERTON/PORT ORCHARD/POULSBO				
Bremerton/Port Orchard Gas is ethanol free.	360-876-5535 (Ext #2)	$2.86	$1.97	www.portofbremerton.org
Port of Brownsville Gas is ethanol free.	360-692-5498	$2.95	$1.90	www.portofbrownsville.org
Port of Poulsbo	360-779-3505 (Ext #3)	$3.40	$2.30	www.portofpoulsbo.com
Port of Kingston Gas is ethanol free.	360-297-3545	$3.09	$1.99	www.portofkingston.org
NORTHWEST PUGET SOUND				
Port Ludlow 5¢/gal discount for cash. Gas is ethanol free.	360-437-0513	$3.00	$2.13	www.portludlowresort.com
Port Townsend (Fish n' Hole) Additional discount for cash or check purchase. Gas is ethanol free.	360-385-7031 100-499 Gal. 500-999 Gal. Over 1,000 Gal.	$3.85 $3.80 $3.75 $3.70	$3.06 $3.01 $2.96 $2.91	www.portofpt.com
JUAN DE FUCA STRAIT				
Port Angeles Boat Haven Additional discount for cash or quantity purchase. Discount for cash purchases.	360-457-4505	$3.34	$2.83	www.portofpa.com
John Wayne Marina (Sequim) Gas is ethanol free.	360-417-3440	$2.81	$2.15	www.portofpa.com
NORTH PUGET SOUND				
Port of Edmonds	425-775-4588 (Ext #230)	$2.95	$2.39	www.portofedmonds.org
Port of Everett Gas is ethanol free.	425-259-6001 200-999 Gal.	$3.29 $3.24	$2.69 $2.64	www.portofeverett.com
WHIDBEY ISLAND				
Coupeville* 5¢/gal discount for 100+ gallon; 10¢/gal discount for 1000+ gallons.	360-678-3625	N/A	N/A	
Oak Harbor Marina Gas is ethanol free. NEW! Stay in guest moorage and get .20/gallon discount up to first night cost of moorage.	360-279-4575 Over 100 Gal.	$3.23 $3.18	$1.93 $1.88	www.whidbey.com/ohmarina
DECEPTION PASS				
Deception Pass (mid-grade)	360-675-5411	$3.65	$3.10	
SWINOMISH CHANNEL				
La Conner Landing Marine Services Gas is ethanol free.	360-466-4478 100-249 Gal. 250-499 Gal. Over 500 Gal.	$3.75 $3.73 $3.71 $3.69	$2.80 $2.78 $2.76 $2.74	www.laconnermarina.com
FIDALGO ISLAND				
Anacortes Cap Sante Over 100 gal. ask at dock about discounts. Gas is ethanol free.	360-293-0694 100 Gal. Disc.	$3.36 $3.28	$2.44 $2.36	www.portofanacortes.com
Anacortes Marine Servicenter Discount on diesel over 100 gal.	360-293-8200 Over 100 Gal.	$2.79 $2.76	$1.93 $1.90	www.marinesc.com/yard/anacortes
Anacortes Skyline Gas is ethanol free	360-293-5134 Over 100 Gal.	$3.24 $3.21	$2.43 $2.40	www.skylinemarinecenter.com

BELLINGHAM				
Harbor Marine Fuel (Squalicum Shell) 10¢/gal discount for cash/check.	360-734-1710	$3.06	$2.32	www.portofbellingham.com
NORTHEAST PUGET SOUND/DRAYTON HARBOR				
Blaine Marina Discount on diesel over 50 gal. Gas is ethanol free.	360-332-8425	Permanently	Closed	www.portofbellingham.com
Semiahmoo Marina Gas is ethanol free.	360-371-0440 (Ext #0)	$2.99	$1.99	www.semiahmoomarina.com
	100-299 Gal.	$2.89	$1.89	
	Over 300 Gal.	$2.79	$1.79	
POINT ROBERTS				
Point Roberts Marina 2% discount for cash; 2% over 100 gallons; 4% over 1000 gallons	360-945-2255	$3.27	$2.47	www.pointrobertsmarina.com
SAN JUAN ISLANDS				
Blakely Island Marina (closed for the season)	360-375-6121	$0.00	$0.00	
Lopez Islander	360-468-2233	$3.45	$2.93	www.lopezislander.com
Port of Friday Harbor	360-378-3114	$3.32	$2.77	www.portfridayharbor.org
	100-299 Gal.	$3.30	$2.75	
	300-499 Gal.	$3.28	$2.73	
	Over 500 Gal.	$3.26	$2.71	
Deer Harbor Marina	360-376-3037	$3.29	$2.41	www.bellportgroup.com
Roche Harbor*	360-378-2155	N/A	N/A	www.rocheharbor.com
	100-299 Gal.			
	300-499 Gal.			
	Over 500 Gal.			
KETCHIKAN, AK				
Petro Marine Gas is ethanol free / Diesel Price does not include tax	907-225-2106	$2.53	$2.19	www.ketchikanmarina.com
	50-99 Gallons	$2.50	$2.16	
	100-399 Gallons	$2.47	$2.13	
Anderes Oil over 50 gal, 3c discount	907-225-2163	$2.53	$2.15	www.anderesoil.com

*Prices adjusted to include taxes not included in the quoted pump price.

**PLEASE NOTE: N/A indicates we were unable to reach anyone at time of call for pricing, but fuel is available.

The current price of fuel at the Marina is $1.93 for diesel and $3.23 for gas which according to the “Fine Edge” survey (attachment A) appears to be fairly competitive with the surrounding marinas. It should be noted that some of the diesel prices listed in the survey include tax and some do not.

Staff seeks the Marina Advisory Committee’s thoughts on this issue.

If you have any questions, please do not hesitate to contact Chris Sublet at (360)279-45676.

General Update

F-Dock Breakwater

City of Oak Harbor
F-Dock Breakwater

DRAFT – Facility Condition Assessment Report

Presented to:

CITY OF Oak Harbor
WHIDBEY ISLAND, WASHINGTON

May 5, 2016

Prepared By

moffatt & nichol

600 University Street, Suite 610
Seattle, WA 98101

Table of Contents

Executive Summary i

1. Introduction 1

1.1. Objective 1

1.2. Project Background 1

1.3. Inspection Scope of Work and Methodology 3

1.4. Inspection Limitations 4

1.5. Damage Rating System 5

2. Observed Inspection Conditions 6

2.1. North Breakwater - Storm Damage 6

2.2. Structural System 11

2.3. Miscellaneous Appurtenances 23

3. Conclusions & Recommendations 24

3.1. Repair Recommendations 24

4. Cost Estimate 26

APPENDICES

Appendix A – Defect Tables

Appendix B – Condition Assessment Rating (CAR) Descriptions

Executive Summary

Moffatt & Nichol (M&N) was retained by the City of Oak Harbor (City) to perform a waterfront facility inspection and condition assessment of the F-Dock Breakwater in Oak Harbor, Washington. A recent storm caused damage to the breakwater, and the City's objective is to assess and repair the damaged breakwater.

The City observed two damaged areas of the breakwater, identified as Floats 8/9 and 10/11. To assess the damage and investigate other potential damage, the scope of work included both an above-water and underwater inspection of the breakwater. The above-water and underwater inspection methodology was based on the American Society of Civil Engineers (ASCE) Manuals and Reports on Engineering Practice Number 130, "*Waterfront Facilities Inspection and Assessment*", 2015 Edition (ASCE 130). The observations noted in the field were analyzed to develop a condition assessment rating for the structure and to determine repair recommendations and associated repair costs.

The breakwater is approximately 940 feet long and consists of a timber wave attenuator attached to the F-Dock concrete floating docks. There are twenty-six 18-inch diameter steel guide piles supporting the breakwater. The mudline under the breakwater is approximately -8 feet Mean Lower Low Water (MLLW). The breakwater's wave attenuator consists of timber panels that extend approximately six feet below the waterline.

An overall Condition Assessment Rating (CAR) was assigned to the breakwater as well as the structural system and miscellaneous appurtenances. The CARs are based on the findings of the field observations. The condition assessment scale includes the following six categories: Good, Satisfactory, Fair, Poor, Serious, and Critical. Descriptions of the six CARs are provided in Appendix B.

Overall, the Breakwater is rated as "*Fair*". All primary structural elements are sound, but minor to moderate defects and deterioration are observed. Localized areas of moderate to severe deterioration are present but do not significantly reduce the structural capacity. Repairs are recommended but the priority of the recommended repairs is generally low unless otherwise noted.

The structural system is rated as "Fair" due to the widespread corrosion on the steel walers and the widespread corrosion and section loss on the guide pile hoop frames.

The miscellaneous appurtenances are rated as "Good". No defects were observed and no repairs are recommended.

Repair recommendations are provided and the rough order of magnitude total construction cost of those repairs is $230,000. The construction costs do not include engineering design services, environmental permitting, and construction administration. Note that the observations and findings used to develop the costs have inherent limitations and actual repair quantities and costs may be significantly different depending on the condition of those portions of the structure and when the repairs are performed.

1. Introduction

1.1. Objective

Moffatt & Nichol (M&N) was retained by the City of Oak Harbor (City) to perform a waterfront facility inspection and condition assessment of the F-Dock Breakwater in Oak Harbor, Washington. A recent storm caused damage to the breakwater, and the City's objective is to assess and repair the damaged breakwater.

The City observed two damaged areas of the breakwater, identified as Floats 8/9 and 10/11. To assess the damage and investigate other potential damage, the scope of work included both an above-water and underwater inspection of the breakwater. The observations noted in the field were analyzed to develop a condition assessment rating for the structure and to provide repair recommendations and associated repair costs.

1.2. Project Background

1.2.1. Facility Description

The breakwater is approximately 940 feet long and consists of a timber wave attenuator attached to the F-Dock concrete floating docks. There are twenty-six 18-inch diameter steel guide piles supporting the breakwater. The individual concrete float modules are connected using through-rods and timber or steel walers. The mudline under the breakwater is approximately -8 feet Mean Lower Low Water (MLLW). For this report, locations on the breakwater are identified by the adjacent corresponding F-Dock slip numbers. Figure 1 shows an aerial view of the Oak Harbor Marina and Breakwater (Source: 2015 Google earth).

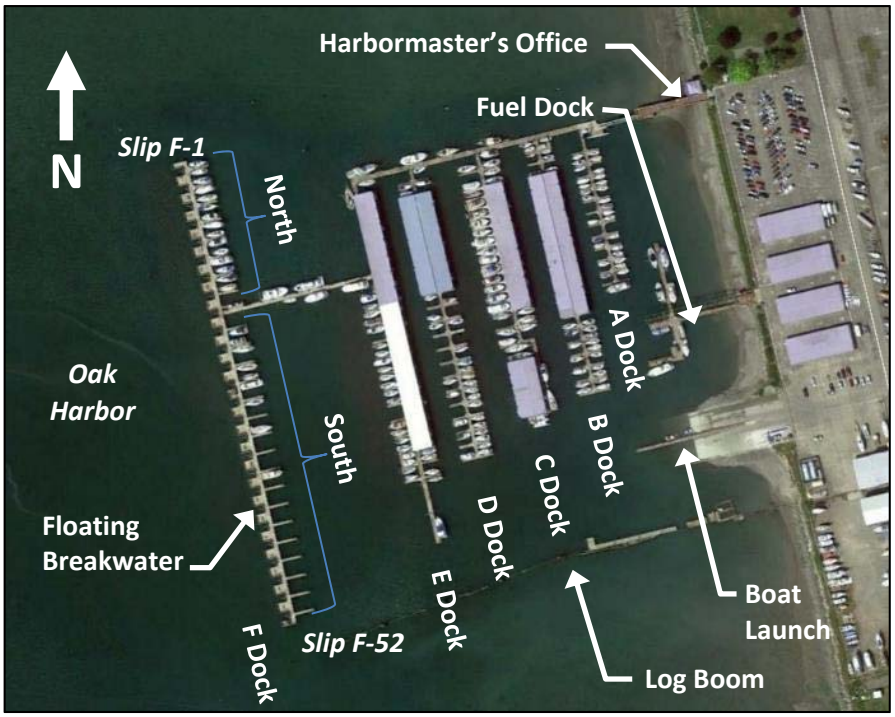

Figure 1: Aerial view of the Oak Harbor Marina and Breakwater (Source: 2015 Google earth)

The breakwater's wave attenuator consists of timber panels that extend approximately six feet below the waterline. Based on the record drawings and the field observations, it appears the concrete floats were fully assembled before attaching the pre-assembled timber panels. The concrete floats were constructed with steel channel sections attached vertically along the lower edge of the floats to be used as part of the lower panel connection. Each timber panel section is approximately nine feet long and was pre-assembled with steel fabrications to fit into the vertical channels on the floats. Once the steel fabrications were set inside the channels the timber panels were then secured to the upper waler. The upper waler connection consists of couplers attached to the float through-rods, a rod extension, and a fastening nut inset on the outer waler. Figure 2 is a section of the breakwater illustrating our best understanding of the connections without disassembling components. Photo 1 shows a general view of the breakwater.

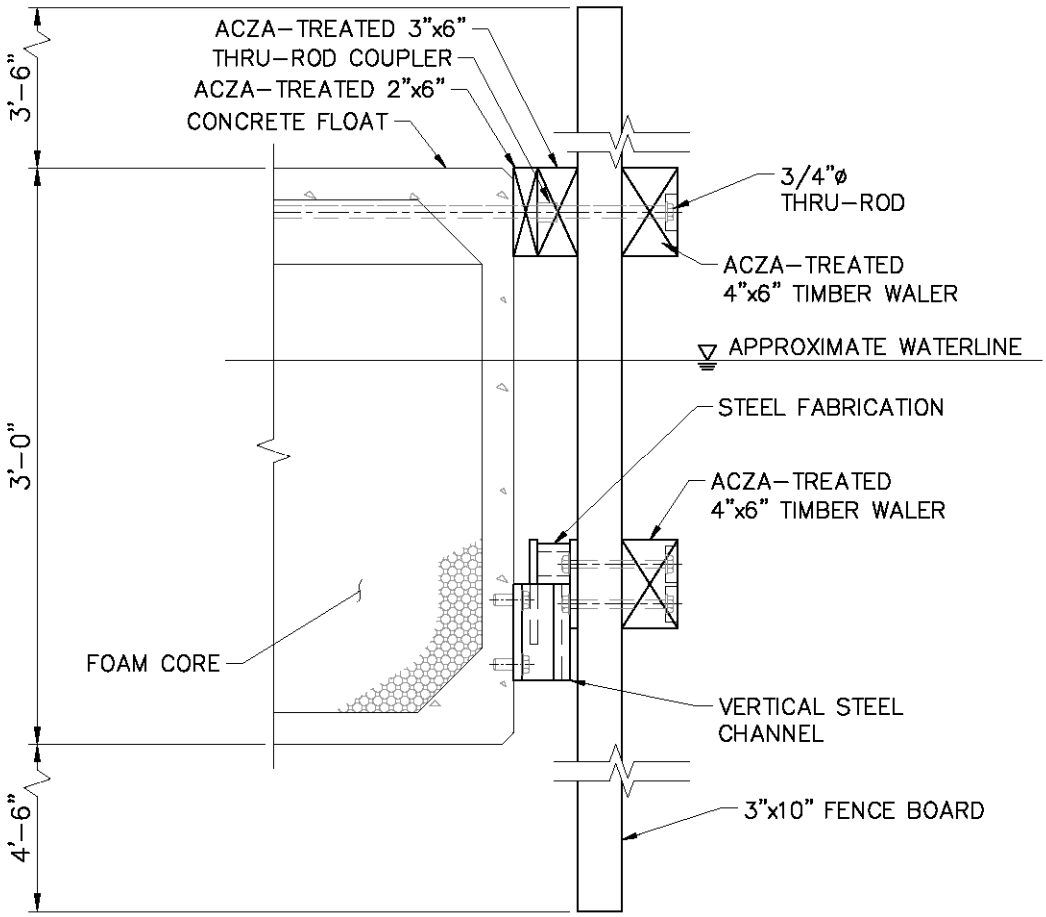

Figure 2: Typical section of the breakwater (timber walers on the north breakwater shown)

Photo 1: View of the breakwater, looking south

1.3. Inspection Scope of Work and Methodology

The above-water and underwater inspection methodology was based on the ASCE Manuals and Reports on Engineering Practice Number 130, "Waterfront Facilities Inspection and Assessment", 2015 Edition (ASCE 130). ASCE 130 provides guidance on types of inspections and specific structure considerations depending on objectives, frequency of inspection and the level of damage. The inspection was split into two areas, north and south, based on the type of inspection conducted. A Repair-Design Inspection was conducted on the north area, Breakwater Floats 1 through 16/17, where the storm-damage was observed. The purpose of the Repair-Design inspection is to collect enough detail to prepare contract bid documents. This includes noting damage and verifying the as-built drawings. A Routine Inspection was conducted on the south area, Breakwater Floats 18/19 through 52, where storm damage was not observed. The purpose of the Routine Inspection is to assess the general overall condition of the structure, and recommend what future course of action should be taken for the structure, if any.

The above-water and underwater inspection was conducted on April 12, 2016 and consisted of visually inspecting the structural elements; including the guide piling, concrete floats, and timber breakwater; and the miscellaneous appurtenances. Photographs of typical conditions and representative defects are provided in Section 2.

The above-deck inspection included an inspection of the concrete deck surface, timber breakwater fence panels, timber walers, and guide pile hoops by walking the deck.

M&N's engineer-divers conducted the underwater inspection with SCUBA equipment in accordance with OSHA regulations and ADCI standards. The underwater inspection was conducted from the breakwater deck using a three-person tethered SCUBA dive crew. Three basic levels of inspection are used for inspecting facilities underwater. The type and extent of damage/deterioration that can be detected depends on the level of inspection performed. The following general descriptions for Levels I through III comply with ASCE 130. This underwater inspection included Level I and Level II inspection of the underwater components.

Level I - Visual or tactile inspection of underwater components without the removal of marine growth. This level of inspection generally serves as a confirmation of as-built conditions and detects obvious damage or deterioration to the structure.

Level II - Partial marine growth removal of a statistically representative sample – for piling, this is typically 10 percent of the visually inspected piles, or roughly 1 in every 10 piles. The procedure requires that removal occur at three distinct bands for a distance of 1 foot at each band. The bands are located near the mudline, at mid-depth, and near the waterline. This level of inspection is intended to detect and identify damage and deterioration that may be hidden by surface biofouling.

Level III (Not Included) – Nondestructive testing or partially destructive testing of a statistically representative sample.

1.4. Inspection Limitations

Information represented in this report only reflects the observations noted from this inspection. Observations did not involve disassembly of components to expose possible non-readily-visible damage or deterioration. Also, the observations and findings have inherent limitations due to the nature of the common types of timber deterioration, including dry rot and marine borer damage. Some timber components may be more deteriorated than could be observed. Therefore, the conditions reported in this report should be regarded as a reasonable best-case condition. Treated-timber structures typically decay from the interior and, as a result, members that otherwise appear to be in good condition on the outside may actually have significant interior decay. Such damage and deterioration is difficult to detect without extensive field drilling or other sophisticated nondestructive and destructive testing methods. The inspection methodology conducted only detects the areas with advanced section loss or rot near the surface. This condition assessment excludes the utility systems and electrical systems.

1.5. Damage Rating System

Individual components were categorized into six damage ratings based on the observations: not inspected, no damage, minor, moderate, major, and severe. Component rating definitions are shown in Table 1.

Table 1: Component condition rating descriptions

COMPONENT RATING	DESCRIPTION
Not Inspected (NI)	Component was inaccessible or not included in the scope.
No Damage (ND)	Component had a sound material surface.
Minor (MN)	*Timber:* Checks, splits, and gouges less than 0.5 inches wide. *Steel:* Less than 50% of perimeter or circumference affected by corrosion at any elevation or cross-section; loss of thickness up to 15% of nominal thickness at any location. *Concrete:* Mechanical abrasion or impact dents; general cracks up to 1/16-inch wide; occasional corrosion stain or small pop-out corrosion spall.
Moderate (MD)	*Timber:* Checks and splits greater than 0.5 inches wide; diameter loss up to 15%; cross-section area loss up to 25%; corroded hardware; marine borer infestation. *Steel:* Greater than 50% of surface at any elevation/cross-section affected by corrosion; 15% to 30% loss of nominal thickness at any location. *Concrete:* Structural cracks up to 1/16-inch wide; corrosion cracks up to ¼-inch wide; chemical deterioration; random cracks up to 1/16-inch wide; soft concrete and rounding corners up to 1-inch deep; frequent corrosion stain or medium pop-out corrosion spall.
Major (MJ)	*Timber:* Checks and splits through full depth of cross-section; diameter loss 15% to 30%; cross-section loss 25% to 50%; heavily corroded hardware; displacement, misalignments at connections. *Steel:* Partial loss of flange edges or visible reduction of wall thickness; 30% to 50% loss of nominal thickness, any location. *Concrete:* Structural cracks 1/16-inch to ¼-inch wide; partial breakage (spalls); corrosion cracks greater than ¼-inch wide; multiple cracking and disintegration of surface due to chemical deterioration.
Severe (SV)	*Timber:* Diameter loss greater than 30%; cross-section area loss greater than 50%; loss of connections and/or fully non-bearing; partial or complete breakage. *Steel:* Structural bends or buckling, breakage and displacement at supports, loose or lost connections; greater than 50% loss of nominal thickness, any location. *Concrete:* Structural cracks greater than ¼-inch wide; breakage; loss of bearing and displacement at connections; reinforcing steel w/cover loss and greater than 30% diameter loss for any main bar; exposed steel due to chemical deterioration; cross section loss greater than 30% of any component for any reason.

2. Observed Inspection Conditions

The following section is a summary of the observations noted in the field. The observations are organized by storm damage, structural components, and miscellaneous appurtenances.

2.1. North Breakwater - Storm Damage

Recent storm damage was observed at breakwater Floats 8/9 and 10/11. This section summarizes the engineer's impressions of the damage to the breakwater and floats. In both locations, the northern panel on the west side was observed to be shifted down by one to three inches. City staff noted that this noticeable shift was not evident prior to the storm event. M&N's engineer-divers observed the through-rods appeared to have pulled through the upper waler on the outboard face. The loose connection to the upper waler enabled movement during subsequent wave action, and the through-rod holes have become enlarged due to bolt reaming. It appeared the storm damage was limited to the walers, through-rod extensions, and the timber panel boards where they are secured to the float. Damage was not observed on the concrete floats or the steel channels connected to the concrete floats. Photo 2 shows the Float 8/9 panel that has dropped approximately 1 inch.

The observations are consistent with the type of damage expected during the storm event described. Waves moving under the floats load the underwater portion of the breakwater resulting in tension in the upper through-rods. Based on a preliminary engineering evaluation, the floats on the north end of the breakwater are more exposed and are subject to larger storm waves than the south end. Advanced deterioration of the components, such as corrosion and rot, in the vicinity of the storm damage, was not observed. This is a likely indication the structural components did not have a reduced capacity prior to the storm event.

Photo 2: Breakwater Float 8/9 with breakwater panel dropped 1 inch, looking west.

Photo 3 shows the Float 10/11 panel that has dropped approximately 3 inches. The adjacent panels did not appear to exhibit storm damage. Photo 4 shows the visible through-rod couplers between the concrete float and timber panel on Float 10/11.

Photo 3: Breakwater Float 10/11 with breakwater panel dropped 3 inches, looking northwest.

Photo 4: Breakwater Float 10/11 with a misaligned breakwater panel. The through-rod coupler is visible between the two walers.

The damage observed at Float 14/15 was noted by the City to be caused by a previous storm and was more extensive than the other damaged floats. Both the upper and lower panel connections had failed. The upper through-rods are pulled through the outer waler. The lower connections attached to the timber panels were observed to have sheared bolts. The diver was able to lift one of the metal fabrications out of the vertical steel channels; the timber it was connected to was undamaged indicating the bolts had sheared and fallen out of the holes. The City has temporarily secured the timber panels to the floats with steel brackets and various sized lumber. Photo 5 through Photo 7 shows the damaged timber panels temporarily secured to Float 14/15.

Photo 5: Breakwater Float 14/15 secured with temporary steel brackets and lumber.

Photo 6: Breakwater Float 14/15 secured with temporary steel brackets and lumber.

Photo 7: South side of Breakwater Float 14/15 secured with temporary lumber.

Photo 8 shows the steel fabrication that was no longer secured to the timber panels. The fabrication was found sitting in the vertical steel channels attached to the float; however, the bolts securing it to the timber panels were missing.

Photo 8: Steel fabrication removed from Breakwater Float 14/15. No bolts were present.

2.2. Structural System

2.2.1. Steel Piling

The breakwater is held in place by 26 18-inch diameter galvanized steel piling. Sacrificial anodes are installed on the piles with stainless steel straps at various elevations.

The galvanized coating on the piling exhibited minor wear; however, no damage or deterioration from corrosion or section loss was observed. The typical condition of the steel piling is shown in Photo 9.

Anodes were observed on 23 of the 26 piles. The other 3 piles had no evidence of anodes. Photo 10 shows a sacrificial anode attached to a pile with stainless steel straps.

Photo 9: Typical condition of steel piling, looking east

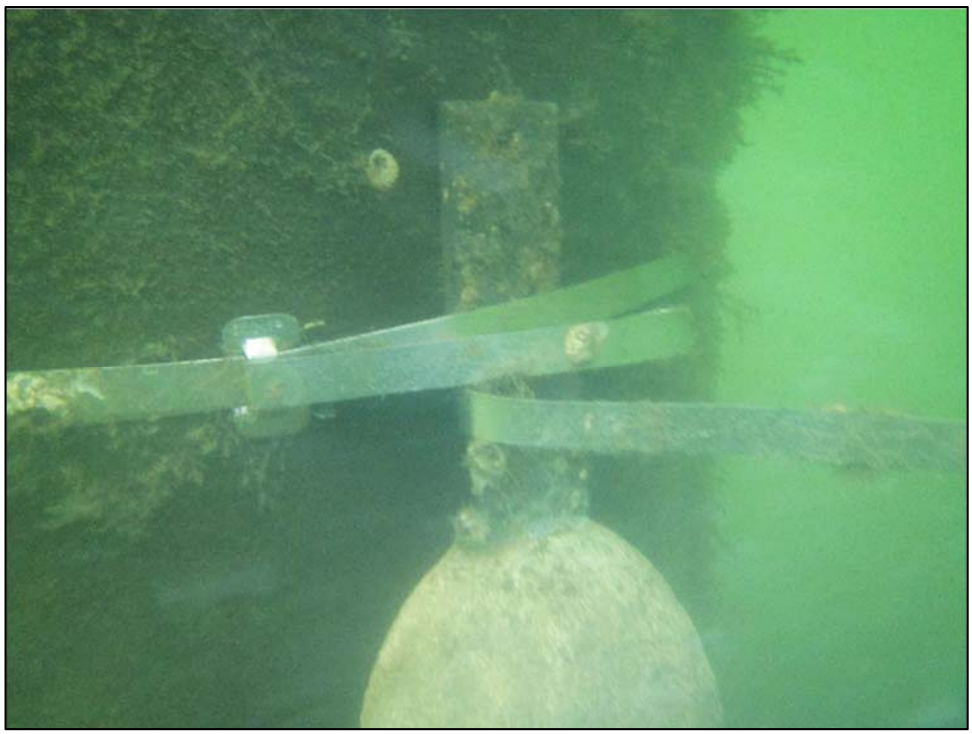

Photo 10: Typical anode and stainless steel straps

2.2.2. Fence Panels

The wave attenuator fence panels are constructed with ammoniacal copper zinc arsenate (ACZA) treated 3-inch by 10-inch boards that extend four and a half feet below the concrete floats and extend three and a half feet above the concrete floats. Each board is attached with a waler at the top and bottom of the concrete floats. The walers are attached to the concrete floats with through-rods. Between Float 1 and Float 16/17, the fence panels are held in place with 4-inch by 6-inch timber walers. Between Float 16/17 and Float 52, the fence panels are held in place with steel channels. The float and fence panel walers are discussed in Section 2.2.4.

The timber fence panel boards are in good condition with the exception of the storm damaged boards discussed in Section 2.1 and five fence panel boards that are broken below the lower waler. The ACZA-treatment appears to be adequately protecting the timber from marine borers and rot. There was no evidence of either marine borer infestation or rot on the fence panels. The fence panel metal hardware exhibits minor corrosion at the top of the fence panels and moderate corrosion near the waterline. Photo 11 shows the typical condition of the fence panel boards.

Photo 11: Typical condition of the timber fence panel boards

2.2.3. Concrete Floats

The concrete floats are three feet deep, have a wall thickness ranging between two inches and six inches, and are filled with a foam core. The concrete floats are in good condition with only minor damage observed in isolated locations. The underwater surface is uniformly coated with marine growth and displayed no evidence of damage to the concrete. Photo 12 shows the typical condition of the concrete float deck surface.

Photo 12: Typical condition of the concrete float surface (Float 1 shown)

Three previously repaired concrete spall repairs at Float 14/15 and Float 46 have failed. Photo 13 shows a failed repair at Float 14/15. Photo 14 shows a failed repair at Float 46.

Photo 13: Failed previous repair in the vicinity of Float 14/15

Photo 14: Failed previous repair in the vicinity of Float 46

Two of the breakwater floats appeared to be listing to the west: Float 14/15 and Float 30/31. Float 14/15 was observed to have supplemental floatation placed under the float; however the cause of the listing is unknown and there is no evidence of added weight. The float did not exhibit evidence of damage to the concrete shell. Float 14/15 is slightly visible in Photo 15; from this perspective it should be more visible which is evidence it is sitting lower than the adjacent floats. Photo 16 shows two of the supplemental floatation billets placed under Float 14/15.

Photo 15: Float 14/15 appears to be listing to the west relative to the other floats. The cause of the list is unknown.

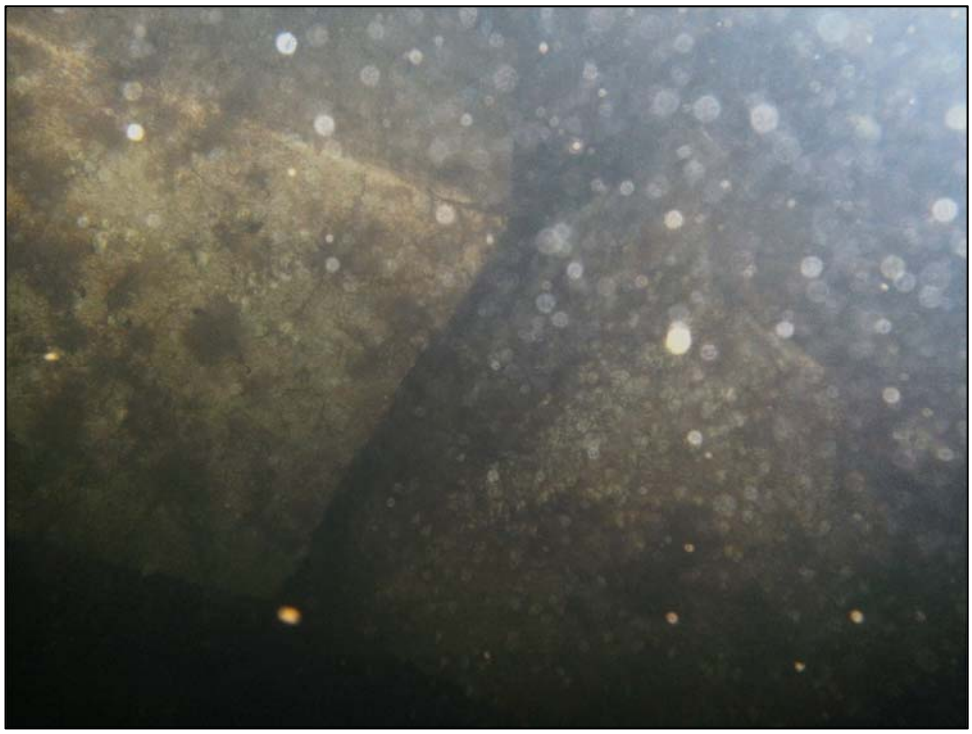

Photo 16: Supplemental floatation under Float 14/15

Float 30/31 houses an equipment shed and a planter box. These additional features add weight to the floats. The float did not exhibit evidence of damage to the concrete shell. Photo 17 shows Float 30/31 listing to the west. The dashed line indicates the expected elevation relative to the adjacent floats.

Photo 17: Float 30/31 appears to be listing to the west relative to the other floats. This float houses an equipment shed and a planter box.

2.2.4. Walers

The breakwater walers include both timber and steel channels. The timber walers are ACZA-treated. The above-water steel channels are galvanized and the underwater steel channels appear to have sacrificial anodes attached.

The timber walers exhibit minor wear from weather and abrasion and are generally in satisfactory condition with the exception of the storm damaged walers discussed in Section 2.1. The timber walers did not exhibit signs of marine borer infestation or fungal decay. Photo 18 shows the typical exterior timber waler.

The interior steel channel walers are in good condition with no evidence of section loss. Photo 19 shows the typical interior steel and timber walers. Photo 20 shows where surface runoff from a hose bibb is causing minor surface corrosion in the vicinity of Float 3.

Photo 18: Typical condition of the timber walers

Photo 19: Typical condition of the timber walers and steel channel walers

Photo 20: Typical condition of the timber fence panel boards

The exterior steel channel walers are in fair condition with widespread surface corrosion. The lower steel channel walers are uniformly coated with marine growth and did not exhibit evidence of section loss. Photo 21 shows the typical above-water steel channel with widespread corrosion. Photo 22 shows a sacrificial anode attached to the lower steel waler.

Photo 21: Typical condition of the above-water steel channel walers

Photo 22: Sacrificial anodes attached to the lower steel channel walers

2.2.5. Guide Pile Hoops

The guide pile hoops are framed on three sides with steel channels. Fenders and Ultra-High Molecular Weight (UHMW) rub blocks are attached to the frame on four sides.

The guide pile hoop frames exhibit widespread corrosion and instances of severe section loss. The corrosion and section loss is generally worse on the southern portion of the breakwater. A buildup of debris was also observed on many of the frames.

The frames exhibit moderate corrosion at 7 of the 25 pile locations. Photo 23 shows the frame for Pile 1/2 with moderate corrosion.

The frames exhibit major corrosion at 9 of the 25 pile location. Photo 24 shows the frame for Pile 15/16 with major corrosion. There is also a buildup of debris in the frame.

The frames exhibit severe corrosion and section loss of the channel web at 9 of the 25 pile locations. Photo 25 shows the frame for Pile 33/34 with severe corrosion and section loss. The fenders and UHMW rub blocks are attached to the frame web and have a significant reduction in capacity due to the web section loss.

Photo 23: Guide pile hoop at Pile 1/2 with moderate corrosion on the steel frame.

Photo 24: Guide pile hoop at Pile 15/16 with major corrosion of the steel frame.

Photo 25: Guide pile hoop at Pile 33/34 with severe corrosion and section loss of the steel frame.

2.3. Miscellaneous Appurtenances

Miscellaneous appurtenances observed during the inspection included fire hoses, life rings, and emergency ladders. The fire hoses and life rings appeared to be well protected from the harsh marine environment. The enclosures appeared to be functional. The fire hoses and life rings were not removed from the enclosures to investigate hidden deterioration. The emergency ladders appeared to be functional; however, they were not tested as part of this inspection. The component surfaces did not exhibit corrosion or other deterioration. Photo 26 shows the typical fire hose and enclosure. Photo 27 shows the typical life ring enclosure.

Photo 26: Typical fire hose and enclosure

Photo 27: Typical life ring enclosure

3. Conclusions & Recommendations

An overall Condition Assessment Rating (CAR) was assigned to the breakwater as well as the structural system and miscellaneous appurtenances. The CARs are based on the findings of the field observations. The condition assessment scale includes the following six categories: Good, Satisfactory, Fair, Poor, Serious, and Critical. Descriptions of the six CARs are provided in Appendix B.

Overall, the Breakwater is rated as "*Fair*". All primary structural elements are sound, but minor to moderate defects and deterioration are observed. Localized areas of moderate to severe deterioration are present but do not significantly reduce the structural capacity. Repairs are recommended but the priority of the recommended repairs is generally low unless otherwise noted.

The structural system is rated as "Fair" due to the widespread corrosion on the steel walers and the widespread corrosion and section loss on the guide pile hoop frames.

The miscellaneous appurtenances are rated as "Good". No defects were observed and no repairs are recommended.

3.1. Repair Recommendations

The following subsections describe the recommended repairs and the urgency of the recommended repairs. Repair recommendations listed as low priority should be performed within the next five to seven years. Repair recommendations listed as moderate priority should be performed within the next two years. If the

City decides to implement the recommended repairs; a repair design inspection per ASCE 130 will be required to collect the detailed information required for the repair design.

The City should conduct a Routine Inspection in 4 years based on the Fair rating of the facility and the aggressive marine environment.

Storm Damage

The following structural system repairs are recommended:

- Floats 8/9 and 10/11; *moderate urgency*
    - Replace interior and exterior timber walers at damage fence panel locations including the through-rod extensions.
    - Replace fence panel boards that are fastened to the float. This includes disassembling, refurbishing and restoring the lower fence panel connections.
- Float 14/15; *moderate urgency*
    - Replace interior and exterior timber walers at damage fence panel locations including the through-rod extensions.
    - Replace fence panel boards that are fastened to the float. This includes disassembling, refurbishing and restoring the lower fence panel connections.

Structural System

The following structural system repairs are recommended:

- Repair guide pile hoops exhibiting major and severe deterioration; *moderate urgency*
- Clean and recoat guide pile hoops exhibiting moderate deterioration; *moderate urgency*
- Remove debris from guide pile hoops on a regular basis; *low urgency*
- Clean and recoat upper steel channel walers; *low urgency*
- Replace missing anodes; *low urgency*
- Reattach anodes to the steel piles using a bolted or welded connection. The current attachment method is anticipated to have a short service life; *low urgency*
- Replace five broken fence panel boards; *low urgency*
- Repair the failed concrete spall repairs on the topside of the floats; *low urgency*
- Add supplemental floatation to the two floats listing to the west; *low urgency*
- Conduct regular inspection and maintenance.

Miscellaneous Appurtenances

The following miscellaneous appurtenance repairs are recommended:

- Conduct regular inspection and maintenance.

4. Cost Estimate

The Rough Order of Magnitude (ROM) total construction cost for the recommended repairs is approximately $230,000. The ROM construction cost includes contractor overhead and profit, Washington State tax, and a 30 percent contingency. The construction costs do not include engineering design services, environmental permitting, and construction administration. A summary is provided below in Table 2.

Table 2: Summary of ROM Costs

	Quantity	Unit	Unit Cost	Extended Cost[2]
Storm Damage Repairs				
Restore Fence Panels	5	EA	$15,000	$75,000
Structural System Repairs				
Replace Pile Hoops	18	EA	$5,000	$90,000
Recoat Pile Hoops	7	EA	$1,000	$7,000
Recoat Steel Walers	1,300	LF	$30	$39,000
Replace Anodes[1]	3	EA	$2,500	$7,500
Replace Fence Panel Boards[1]	5	EA	$2,500	$7,500
Repair Failed Concrete Patches	3	EA	$500	$1,500
Add Supplemental Floatation	1	LS	$1,000	$1,000
Miscellaneous Appurtenance Repairs	-	-	-	-
			Total[2]	**$230,000**

Notes:
1. Unit costs are high due to the low quantity of repairs; a dive team is assumed to be required for one full day.
2. Extended costs and total cost are rounded.

The observations and findings used to develop the ROM construction costs have inherent limitations as discussed earlier in this report under Section 1.4 Inspection Limitations. Therefore, the quantities used in this ROM construction cost are approximate; actual conditions could vary greatly due to the limited scope of the inspection.

Appendix A

Defect Tables

APPENDIX A - INSPECTION RECORD

COMPANY: City of Oak Harbor	**COMPONENT TYPE(S):** Varies	**MATERIAL:** Varies	DATE: 4/12/2016 JOB NO: 9331 SHT NO.: 1
LOCATION: Marina			RECORDER: BJH
LOCATION ID: F-Dock Breakwater			DIVERS/INSP'RS: BH, AP

Component ID	LOCATION[1] (&/or: ID NO.; STA)	CONDITION RATING						COMMENTS
		NI	ND	MN	MD	MJ	SV	
FENCE PANELS								
Fence Panel	General Hardware				X			Moderate corrosion on lower hardware
Fence Panel	General Hardware			X				Minor corrosion on upper hardware
Fence Panel	Float 3/4 - West Face						X	Fence panl board broken below lower waler - SE corner
Fence Panel	Float 6/7 - West Face						X	Fence panl board broken below lower waler - 8th board from south
Fence Panel	Float 28/29 - North Face						X	Fence panl board broken below lower waler - 3rd board from west
Fence Panel	Float 52 - North Face						X	Fence panl board broken below lower waler - 2nd board from west
Fence Panel	Float 52 - North Face						X	Fence panl board broken below lower waler - 3rd board from west
WALERS								
Waler - Timber	General - Outer Waler			X				Minor weathering and abrasion
Waler - Steel	General - Outer Waler				X			Widespread surface corrosion
Waler - Steel	Float 3 - Inner Waler			X				Surface corrosion at surface water runoff
PILE ANODES								
Pile Anode	Pile 1/2						X	Missing anode; one stainless steel strap still present
Pile Anode	Pile 13/14						X	Missing anode and stainless steel straps
Pile Anode	Pile 15/16						X	Missing anode and stainless steel straps
CONCRETE FLOATS								
Concrete Float	Float 14/15 - F-Dock East			X				Spalled Concrete - previous repair; 1/2" vertical gap between floats
Concrete Float	Float 14/15 - Breakwater				X			Appears to be sitting lower than adjacent floats
Concrete Float	Float xx/xx - Breakwater			X				Appears to be sitting lower than adjacent floats
Concrete Float	Float 29			X				Spalled Concrete - previous repair
Concrete Float	Float 46			X				Spalled Concrete - previous repair

Note 1: Locations are relative to the F-Dock slip numbers

APPENDIX A - INSPECTION RECORD

COMPANY: City of Oak Harbor	**COMPONENT TYPE(S):** Varies	**MATERIAL:** Varies	DATE: 4/12/2016 JOB NO: 9331 SHT NO.: 2
LOCATION: Marina			RECORDER: BJH
LOCATION ID: F-Dock Breakwater			DIVERS/INSP'RS: BH, AP

Component ID	LOCATION[1] (&/or: ID NO.; STA)	CONDITION RATING						COMMENTS
		NI	ND	MN	MD	MJ	SV	
PILE HOOPS								
Pile Hoop	Pile 1/2				X			Corrosion
Pile Hoop	Pile 3/4				X			Corrosion
Pile Hoop	Pile 5/6				X			Corrosion
Pile Hoop	Pile 7/8				X			Corrosion
Pile Hoop	Pile 9/10				X			Corrosion
Pile Hoop	Pile 11/12				X			Corrosion
Pile Hoop	Pile 13/14				X			Corrosion
Pile Hoop	Pile 15/16					X		Corrosion; Clean out debris
Pile Hoop	Pile 17/18					X		Corrosion
Pile Hoop	Pile 19/20						X	Severe section loss
Pile Hoop	Pile 21/22						X	Severe section loss
Pile Hoop	Pile 23/24					X		Corrosion
Pile Hoop	Pile 25/26					X		Corrosion
Pile Hoop	Pile 27/28						X	Severe section loss
Pile Hoop	Pile 29/30						X	Severe section loss
Pile Hoop	Pile 31/32					X		Corrosion
Pile Hoop	Pile 33/34						X	Severe section loss
Pile Hoop	Pile 35/36						X	Severe section loss
Pile Hoop	Pile 37/38					X		Corrosion
Pile Hoop	Pile 39/40						X	Severe section loss; Clean out debris
Pile Hoop	Pile 41/42					X		Corrosion

Note 1: Locations are relative to the F-Dock slip numbers

APPENDIX A - INSPECTION RECORD

COMPANY: City of Oak Harbor	**COMPONENT TYPE(S):** Varies	**MATERIAL:** Varies	DATE: 4/12/2016 JOB NO: 9331 SHT NO.: 3
LOCATION: Marina			RECORDER: BJH
LOCATION ID: F-Dock Breakwater			DIVERS/INSP'RS: BH, AP

Component ID	LOCATION[1] (&/or: ID NO.; STA)	CONDITION RATING						COMMENTS
		NI	ND	MN	MD	MJ	SV	
Pile Hoop	Pile 43/44					X		Corrosion
Pile Hoop	Pile 45/46					X		Corrosion
Pile Hoop	Pile 47/48						X	Severe section loss
Pile Hoop	Pile 49/50						X	Severe section loss
Pile Hoop	Pile 51/52					X		Corrosion

Note 1: Locations are relative to the F-Dock slip numbers

Appendix B

Condition Assessment Rating (CAR) Descriptions

Table B1: Condition Assessment Rating Descriptions (ASCE 130)

CAR Rating	Description
''Good''	No defects or only minor defects noted. Structural elements may show very minor deterioration, but no overstressing observed. No Repairs are required.
''Satisfactory''	Limited minor to moderate defects or deterioration observed, but no overstressing observed. No repairs are required.
''Fair''	All primary structural elements are sound; but minor to moderate defects or deterioration observed. Localized areas of moderate to advanced deterioration may be present but do not significantly reduce the load bearing capacity of the structure. Repairs are recommended, but the priority of the recommended repairs is low.
''Poor''	Advanced deterioration or overstressing observed on widespread portions of the structure, but does not significantly reduce the load bearing capacity of the structure. Repairs may need to be carried out with moderate urgency.
''Serious''	Advanced deterioration, overstressing or breakage may have significantly affected the load bearing capacity of primary structural components. Local failures are possible, and loading restrictions may be necessary. Repairs may need to be carried out on a high-priority basis with urgency.
''Critical''	Very advanced deterioration, overstressing, or breakage has resulted in localized failure(s) of primary structural components. More widespread failures are possible or likely to occur, and load restrictions should be implemented as necessary. Repairs may need to be carried out on a very high priority basis with strong urgency.