Marina Advisory Committee

May 2, 2016

CITY OF
Oak Harbor
WHIDBEY ISLAND, WASHINGTON

March 2016 Occupancy

Based upon Marina Program Reports

Permanent Moorage

Dock	Total Slips	Total Occupied	Total Vacant	Percent Occupied
A	54	44	10	81%
B	82	68	14	83%
C	55	53	2	96%
D	85	39	46	46%
E	71	53	18	75%
Totals	347	257	90	

- There were 6 more slips occupied in March than in February.
- The permanent moorage docks were 74% occupied.
    - +2% compared to February.
      +3% compared to March 2015.

Conditional Moorage

Dock	Total Slips	Total Occupied	Total Vacant	Percent Occupied
G	16	13	3	81%
F	52	43	9	73%
S	8	8	0	100%
Totals	76	65	12	

- There were 5 more slips occupied in March than in February.
- The conditional moorage docks were 86% occupied.
    - +8% compared to February.
    - +41% compared to March 2015.

Overall Summary

- The combined permanent and conditional moorage marina docks were 76% occupied in March.
    - +3% compared to February.
    - +9% compared to March 2015.
- The average percentage of occupancy on each dock was 79% in March.
    - +1% compared to February.
    - +13% compared to March 2015.

Marina Advisory Committee Meeting
May 2, 2016
7:00 p.m.

Committee Members
Ken Hulett, Chairman
Open Position, Vice-Chairman
J.J. Jones
Mahmoud Abdel-Monem
Jeff Malmgren

1. Public Comment
2. Review of the April 4, 2016 meeting notes
3. Whidbey Island Race Week Launch Options – Discussion & Recommendation
4. Hoist Repair Options - Discussion & Recommendation
5. General Update
6. Marina Advisory Committee Comments
7. Next Meeting – June 6, 2016
8. Adjourn

Review of Meeting Notes

April 4, 2016

City of Oak Harbor **April 4, 2016**
Marina Advisory Committee 7:00 p.m.
Regular Meeting Agenda Oak Harbor City Hall

Roll Call: Mr. Hulett __X__ Mr. J. Jones __X__ Mr. Abdel-Monem _X _ Mr. Malmgren ____ Open Position ____

Staff: Steve Powers, Chris Sublet

Public: Steve Hucke

1. Public Comment:
   Mr. Hucke asked if there were any plans to change the slope of the launch ramp. He also asked about the trailer in the launch ramp parking lot. Mr. Hulett explained that the ramp is an issue and hopefully will be changed soon. Mr. Sublet explained that he is researching the owner of the trailer.

2. Review of the April 4, 2016 Meeting Minutes:
   Approved as written.

3. Launch Ramp and Parking Fee – Discussion
   Mr. Hulett introduced the agenda item and explained that this topic is continued from several previous meetings. He explained that the DNR issue regarding if charging for use of the launch ramp would affect the lease, came up due to some comments from former Harbormaster Dave Williams.

   Discussion
   The Committee discussed how charging for use of the launch ramp may affect the lease when it is renewed in 3 years. They also discussed if charging for the ramp would become a point of contention during the lease negotiations. The Committee also discussed how the local community may react to charging for the launch ramp.

   Action
   A motion was made to move forward with charging to use the launch ramp. The motion was voted on and approved unanimously.

4. Whidbey Island Race Week Moorage Fee – Discussion
   Mr. Hulett introduced the agenda item and explained that staff is recommending that the moorage rates remain the same as in 2015.

   Discussion
   The Committee discussed how WIRW impacts the community and how keeping the rates the same as 2015 may help attract more boats. They also discussed how the per foot nightly rate of $0.67 is still much lower than the regular guest moorage rate.

   Action
   A motion was made to keep the rates that same as in 2015. The motion was voted on and

approved unanimously.

5. Hoist Update – Information

Mr. Sublet gave an informational update on the hoist. He explained that Wilson Surveying and Engineering had completed the structural analysis and that the preliminary verbal report is that 9 of 10 beams they tested are rotten. He also explained that structural report would also include an estimated cost of repair.

Discussion

The Committee discussed different options for launching the WIRW boats and the costs associated with each option. They also discussed if there was another long term option, such as an inflatable trailer, fork lift or conventional trailer. The Committee commented and discussed how the marina should have a way to remove large boats from the water.

Action

No action was taken.

6. Breakwater Update – Information

Mr. Sublet gave an informational update on the breakwater damage and repair. He explained that the contract with Moffat & Nichol is on the City Council agenda for 4/5. Once the contract is approved a survey of the entire breakwater will be completed. He continued to explain that the insurance company will only pay for the damage created in the November storm.

Discussion

The Committee asked how they would identify storm damage and about the permitting process. Staff explained that Moffat & Nichol may be able to tell what was damaged in the storm by looking at the marine growth and corrosion on the metals. Staff also explained that Moffat Nichols has a person that specializes in obtaining permits and they will be filing for all of the necessary permits for the repair project.

Action

No action was taken.

7. General Update:
   - None

8. MAC Comments:
   - Mr. Jones asked if the vacant Marina Advisory Committee position will be filled.
     - Staff explained that they believed it was the Mayors intent to fill the vacant position.

9. Next regular meeting— May 2, 2016

10. Adjourn

Whidbey Island Race Week Launch Options

Discussion

&

Recommendation

City of Oak Harbor
Oak Harbor Marina

Memo

To: Marina Advisory Committee

From: Chris Sublet, Harbormaster

CC: Steve Powers, Director Development Services

Date: May 2, 2016

Re: Whidbey Island Race Week Boat Launch Options

As the Marina Advisory Committee is aware, the boat hoist is not operational and will not be operational for the 2016 Whidbey Island Race Week event. There are approximately 5 - 8 boats that historically use the boat hoist to launch and retrieve their boats. The cost for a round trip hoist is $60.00 plus tax.

DISCUSSION

Staff has researched several options for launching and retrieving these boats. These options consist of renting a crane, launching at another marina, using the Mariners Haven trailer and taking no action. The costs estimates associated with each option and notes are provided in the table below. The options are not listed in any particular order.

Method	Approx. Cost	Notes
Rent a Crane		• Due to tides the crane will have to reach out 150' and support 7000 pounds. • The crane will have to come twice, once for the launch and again for the retrieval. • Coordination with those participants wanting to use the crane to launch and retrieve will be required. • The crane will have to be reserved soon.
-Sickle Steel Crane Co	Appx. $17,000 *(Based upon the crane coming once to launch and another time to retrieve with 4 hours labor each time.)*	• See attachment A • Note: The estimate does not include a rigger which will add appx. $4000.00 to the estimate.

Method	**Approx. Cost**	**Notes**
-Ness Crane	Appx. $16,000 *(Based upon the crane coming once to launch and another time to retrieve with 4 hours labor each time.)*	• See attachment B
-Nichols Bros.	n/a	• Does not rent or loan their cranes out.
Launch at Another Marina		• Launch at another marina such as Cap Sante or Everett and sail/motor to Oak Harbor.
-Reimburse for launch and fuel.	TBD	• Reimbursement may be based upon receipts. • Reimbursement may be a flat fee for all size boats. • Reimbursement amount may not exceed the cost of moorage for WIRW for either method.
Use Mariners Haven Trailer	TBD	• Boats will need to be lifted from trailer to trailer (a small crane may still be needed.). • Mariners Haven trailer can only accommodate boats with less than a 6' draft. • Positioning the boats on the Mariners Haven trailer may be difficult due to the angle of the hull leading to the transom.
Take No Action	$0.00	• The question has been raised if it is the responsibility of the marina to provide a method to launch the boats.

ACTION
Staff seeks a recommendation from the Marina Advisory Committee as to which launch option is most appropriate.

SICKLESTEEL CRANES • INC
- A Barnhart Company -

1021 Sicklesteel Lane
Mount Vernon, WA 98274
Phone: 360-428-3811
Fax: 360-428-3018
www.sicklesteelcranes.com

February 11, 2016

Oak Harbor Marina
865 SE Barrington Dr.
Oak Harbor, WA 98277

Proposal – 156327

Attn: **Chris Sublet - Phone: 360-279-4575 - Email: csublet@oakharbor.org**
RE: **Crane services for placing race boats in water and then remove**

Chris;

We appreciated the opportunity to discuss your upcoming project in Oak Harbor, WA. We look forward to the opportunity to serve you.

SCOPE OF WORK

Provide a crane and crew to lift as directed race boats weighing 6,500# at a 170' radius from centerpin on Saturday, July 9th, 2016 in Oak Harbor, WA.

EQUIPMENT RECOMMENDATION

We are offering a 250 ton Demag AC615 all terrain crane in a fixed jib with superlift configuration with 39' of jib and 132,000# of crane counterweight.

PRICING

250 ton Crane Transport In and Assemble	$3,150 per way
250 ton Crane Operated Hourly Rate* – 3 Hour Min. Per Shift *Rate includes operator and oiler	$522 per hour
250 ton Crane Disassemble and Transport Out	$3,150 per way
Labor Minimums and Pricing:	
Labor – 4 hour increments	$85 per person per hour
Overtime Premium	$35 per person per hour
Double Time Premium	$65 per person per hour
Missed Meals	$120 per person
Required Federal / State Reports	$50 per report

Pricing does not include applicable WSST.

PAYMENT TERMS

Upon Receipt

OTHER AGREEMENTS INCORPORATED BY REFERENCE

1. The Collective Bargaining Agreements between Sicklesteel Cranes and the Operating Engineers are incorporated into this proposal by reference. Copies are available upon request.
2. Sicklesteel Cranes General Terms and Conditions are incorporated herein by reference. Copies are available upon request.

Your signature on one copy returned to Sicklesteel Cranes will make a legal contract for the above described work.

For:	**Oak Harbor Marina**	**Sicklesteel Cranes**	
Accepted:	_____	Approved:	_____
Date:	_____	Date:	_____

NESS & CAMPBELL CRANE, INC

Quote Number: 21405

Quoted out of: Burlington

Date of Quotation: 3/29/2016

Contact: Furrenes, Gary
Phone Number: (360) 333-1635
E-Mail: garyf@nessandcampbell.com

Customer: City Of Oak Harbor
Address: 845 Se Barrington Drive
Oak Harbor,WA 98277

Quoted To: Chris Sublet
Work Phone: (360) 279-4576
E-Mail: csublet@oakharbor.org

Jobsite Name: Oak Harbor Marina
Jobsite Address: 1401 SE Catalina Drive
Oak Harbor, WA 98277

Start Date:
End Date:
Quotation Status: Pending

Work to be performed: Set Sailboats In/Out of Water.

Lift Information:

Size: 175 Ton	Ctwt: 99k	Boom: 161 ft.	Jib: 59 ft.	Offset: Zero
Set Back: 20 ft.	Up: 20 ft.	In: 145 ft.	Weight: 7k#	Radius: 165 ft.

Equipment Required: 175 Ton-99k-Rigging TBD

Description	Est. Qty		Rate	Est. Amt
Mobilization In/Out, Setup/Teardown, Permits. "Hook Ready"	1.00	Each	$4,550.00	$4,550.00
175 Ton General Crane Work (2)Hour Minimum	6.00	Hours	$509.00	$3,054.00
Insurance USL&H Marine Insurance	6.00	Hours	$45.00	$270.00
Rigger (4)Hour Minimum, Saturday Rate	6.00	Hours	$140.00	$840.00
			Quote Estimate:	**$8,714.00**

Comments:

*****Issuance of a purchase order acknowledges acceptance of this quotation**

Apply Applicable WSST

NESS & CAMPBELL CRANE, INC

Quote Number: 21405

Quoted out of: Burlington

Date of Quotation: 3/29/2016

Contact: Furrenes, Gary
Phone Number: (360) 333-1635
E-Mail: garyf@nessandcampbell.com

Terms & Conditions:

ESTIMATED RATES ARE BASED ON THE FOLLOWING CLARIFICATIONS:

1. This estimate is in accordance with the terms and conditions of the Daily Crew Log Agreement. This agreement is also posted on our web site at www.nessandcampbell.com for your review.
2. The acceptance of this quotation is based on acknowledgment of NCCI's standard contract terms and conditions and standard Quote terms & conditions.
3. Access: Contractor/Owner will provide access for equipment and a safe place to work which complies with all Federal OSHA and OSHA regulations. Firm, level, all weather roadways, access roads and 1.
4. All cranes and equipment are quoted portal-to-portal from the yard that they travel out of, unless otherwise noted.
5. NCCI is a union contractor. Our Craft will not cross a sanctioned strike picket line. Contractor / Owner will be responsible for all costs associated with all mobilization & demobilization. A two gate system must be in place for NCCI to operate on a sanctioned construction site.
6. All equipment is subject to availability at the time of dispatch. Equipment & Labor schedule changes are subject to availability, price increases, and standby charges. NCCI will not be held responsible for any delays or lost time due to mechanical breakdown or any situation out of the direct control of NCCI.
7. The cranes will be erected and dismantled during straight time hours in a normal 40 hour work week during a continuous operation, using Operating Engineers. If any other craft should claim this work and is awarded said work, then the contractor will furnish that craft at no cost to NCCI.
8. All work will be performed in accordance pursuant to the controlling union contract unless otherwise specified.
9. Labor minimums, subsistence, crew travel and overtime will be billed pursuant to the controlling union contract unless otherwise specified.
10. The contactor will furnish qualified signalmen, riggers and lift director, whom are in compliance with current federal OSHA standards, for directing crane operations and rigging applications.
11. In the event NCCI provides rigging, equipment, and/or material without a rigger, customer will inspect and accept the rigging prior to start of work and will accept full responsibility for its quality and intended use. Size and capability of rigging used for work performed is at the sole discretion of the Contractor.
12. All site-specific testing or training required of NCCI employees will be invoiced at the applicable rates.
13. All personnel, permits and/or equipment required for street use or traffic control will be furnished by contractor unless otherwise noted.
14. All testing and certification of any slings, shackles, or spreader bars will be the responsibility of the contractor.1.
15. Electrical, mechanical, anchor connections, disconnections, and/or final alignment by others unless otherwise specified.
16. All equipment to be free of all toxins.
17. NCCI is not responsible for the structural integrity of any unit being lifted or lifting devices provided by others. NCCI will assume no liability or responsibility for the adequacy of the design or the strength of any lifting lug embedded or attached to any object, whether concrete, steel, or other, to which NCCI attaches for handling or holding, whether or not it is furnished by Contractor/Owner, manufacturers, or others.
18. NCCI is not responsible for the removal, dismantle, or disposal of any crating or packing material included with any equipment unless otherwise noted.1.
19. NCCI requires 48 hours notice to receive equipment at NCCI's yard and 48 hours notice to transport equipment to the customer's job site.
20. Storage is available and quoted separately.1.
21. NCCI will not be responsible for any internal damage to equipment or for any damage to equipment prior to arriving in NCCI's yard. Customer is to inspect equipment immediately upon arrival at NCCI's yard. NCCI will not be responsible for damage to mechanical equipment during offloading, storage, loading, or transport of any of the equipment unless the damage is the result of NCCI's sole negligence.
22. If mats, steel plates, or plywood are required to level or support the crane per the manufacturer's specifications or to protect site areas, these items are available at additional expense. NCCI assumes no responsibility for site preparation and/or site damage. NCCI will take limited precautions but will not be responsible for any damage to underground utilities, curbs, gutters, concrete slabs, sidewalks, pavement, trees or shrubs. Any damage to tires or wheels due to jobsite conditions will be the responsibility of the Contractor. Others are to provide and maintain a clear, firm site with backfill in place and leveled to

Attachment B

Quote Number:	21405	**Quoted out of:**	Burlington
Date of Quotation:	3/29/2016	Contact:	Furrenes, Gary
		Phone Number:	(360) 333-1635
		E-Mail:	garyf@nessandcampbell.com

approximate grade suitable for operation of the equipment.

23. Insurance: NCCI will provide standard insurance in the amount of $1 Million Dollars each for Workmans Compensation and General Liability andu Automotive. Higher limits, endorsments and addtionally insured certificates are availble with the approval of NCCI's management and may be subject to an addional fee. Standard insurance certificates can be viewed on our website at www.nessandcampbell.com
24. NCCI will provide our standard two page lift plan for required jobs. Lift plans that require more detailed information or drawings, engineering calculations or review and customer's lift plan paper work to be completed will be charged at the rate of $145.00 per hour.
25. Applicable sales tax is not included.
26. Payment terms are net 30 days from the invoice dates.
27. This quote is good for 60 days.

Hoist Repair Options

Discussion

&

Recommendation

City of Oak Harbor
Oak Harbor Marina

Memo

To: Marina Advisory Committee

From: Chris Sublet, Harbormaster

CC: Steve Powers, Director Development Services

Date: May 2, 2016

Re: Hoist Options

As the Marina Advisory Committee is aware, the boat hoist is not currently operational. Wilson Survey and Engineering has performed a structural analysis of the structure (attachment A), and has identified a number of structural issues. Wilson Survey and Engineering has estimated the cost of repair to be $197,000 - $200,000.

SUMMARY

The boat hoist was constructed in 1974 and has a 6500 pound weight capacity. The structure is mad e of creosote treated piles and beams. The actual hoist mechanism is an electric Chesterfield motor which rolls the cable drums and propels the hoist carriage on a single "I" beam track.

The hoist is typically used by some marina tenants and non-marina tenants. It is also used for 5 – 8 Whidbey Island Race Week participants. Small boat contract users get one free hoist in or out, as part of the contract. The number of small boat contract tenants that use the one free hoist included in the contract is estimated to be less than 15.

The marina has a total of 423 slips ranging in size from 24' – 60'. There are 108, 24' slips that could possibly (depending on the type and weight of boat) utilize the hoist, however very few actually do.

Depending on the type of boat and trailer, it typically takes staff 30 – 45 minutes to complete a one way hoist. Often times 2 staff members are required to safely rig and hoist the boat. The current cost for a round trip hoist, is $54.00 plus tax for a roller trailer and $60.00 plus tax for a bunk trailer.

The table below displays historical revenue information and estimated number of roundtrip hoists per year. The table does not include hoists performed as part of the Small Boat contract.

Year	Revenue	Estimated Number of Roundtrip Hoists Per Year.
2010	$1399.05	27
2011	$1845.05	35
2012	$2222.75	43
2013	$1648.76	32
2014	$1648.51	32
2015	$1994.78	35

DISCUSSION
Staff has researched several options regarding possible solutions to the hoist issue. These options consist of purchasing a travel lift or trailer, repairing the hoist, and not repairing the hoist. The costs estimates associated with each option and notes are provided in the table below. The options are not listed in any particular order.

Method	Approx. Cost	Notes
Purchase a travel lift/trailer	$100,000 - $300,000 used $500,000 - $1,000,000 new	• May need to modify the launch ramp, which will add a significant expense. • Boats will need to be lifted from trailer to trailer. Depending on method chosen purchase of additional lift equipment may be necessary. • May create a new dry storage business segment for the marina. • May be perceived as putting the marina (City), in competition with a private business.
Don't repair the hoist	TBD	• The Committee may want to consider if it is the responsibility of the marina to provide a method to launch the boats and/or if the hoist is a necessary part of marina operations • Mariners Haven which is located at the end of the marina parking lot, does have the ability to launch and retrieve boats from 24' – 50'. • We may at some point need to dismantle the hoist structure which may be expensive.
Repair the Hoist	$197,000 - $200,000	• The repair is an un-budgeted item and the marina does not have sufficient reserves to pay for it. The use of an inter-fund loan may be possible. • May want to delay the repair for 2 years to take advantage of RCO grants. • If a cost-recovery methodology is adopted, the price of single or round trip may go up significantly. This in turn may reduce the number of users.

ACTION
Staff seeks a recommendation from the Marina Advisory Committee regarding which option is preferred.

Report on Condition of City of Oak Harbor Boat Launcher

BACKGROUND

The City of Oak Harbor boat launcher is an overhead trolley system approximately 200' long and 15' wide that was constructed in the 1970s based on a design by Reid, Middleton, & Associates. The only available original drawing is included as Appendix A. The photo below shows the structure looking from approximately the southeast:

SITE VISIT

Our site visit on March 29 accomplished the following tasks, per our scope:

- We sketched the structure, photographed it, and made notes of damage.
- We scanned the structure with our Trimble TX-5 laser scanner to provide a 3D shape of the structure under its own weight. The scan imaging was quite successful, and all of the superstructure can be viewed from a workstation, and measurements accurate to 0.01 foot made at a desk.
- Alan Mooers and I spent most of the day in the gondola, making close observations and photographing the structure as we did so.
- We drilled samples of wood from suspected decay areas with a 3/8" diameter by 18" long drill. Holes were repaired afterwards by plugging with dowels treated in copper napthenate wood preserver, and covered with a high quality caulk.
- We measured the shape of the trolley beam by use of the gondola and the Wilson personnel riding in it by means of a survey instrument, to the nearest 0.02 foot. Note that while we originally planned to also perform a load test with an approximately 3,800 lb. block of concrete, this was cancelled, with the consent of City of Oak Harbor engineering staff, for reasons explained herein.

Detailed observations, including conditions of all wood boring samples, are presented in the appendix. In addition, Wilson is presenting to the City a disc with all the photos taken as well as the scan data which is expressed as a "point cloud" of coordinates in three dimensions of the entire structure.

SUMMARY OF CONDITION

Please refer to Diagram 1 on the next page which describes the structure and the coordinate reference system for the condition survey. A series of pilings, 20' on centers, support a series of transverse ("bent") beams. These bent beams support the steel trolley beams from which the boat launcher is suspended, and is electrically propelled. The longitudinal stability beams, together with steel bracing rods, stabilize the tops of the pilings from sway.

The pilings are in excellent condition. There is no apparent deterioration, and they display excellent retention of their preservative treatment. This being the case, there are two major components left to the supporting superstructure that are affected by gravity load from the boat launcher, i.e. the steel beams and the bent beams.

Per the tabulation of 16 test samples in Appendix B, only two samples (at one bent) were without decay. In the other cases, a shell of dry and apparently sound wood enclosed decayed material. Some material could be wadded like mud, while other material was runny and wet. In the majority of cases, then, the interior portions of the bent beams have no structural strength.

Moist material from the interior of a beam

The steel beams have corroded, but not uniformly. Instead, corrosion is concentrated under steel plates welded to the tops of the beams in order to strengthen them. Overplating is a common method of adding strength against lateral-torsional buckling (L-T buckling), though it is not as effective as welding a channel flatwise over the top of the beam. In the case of the boat launcher, the welds were not continuous, and the plates have popped up, destroying welds and creating spaces to trap moisture and allowing corrosion.

Overplate has buckled for 4' of this trolley beam

At this broken weld, a 3/8" gap has opened. Inside, about 1/8" of the beam flange has been rusted away

Wilson
SURVEY/ENGINEERING

CONDITION OF CITY OF OAK HARBOR
BOAT LAUNCHER 2016-032

DIAGRAM 1: COORDINATE REFERENCE SYSTEM FOR WOOD SAMPLING

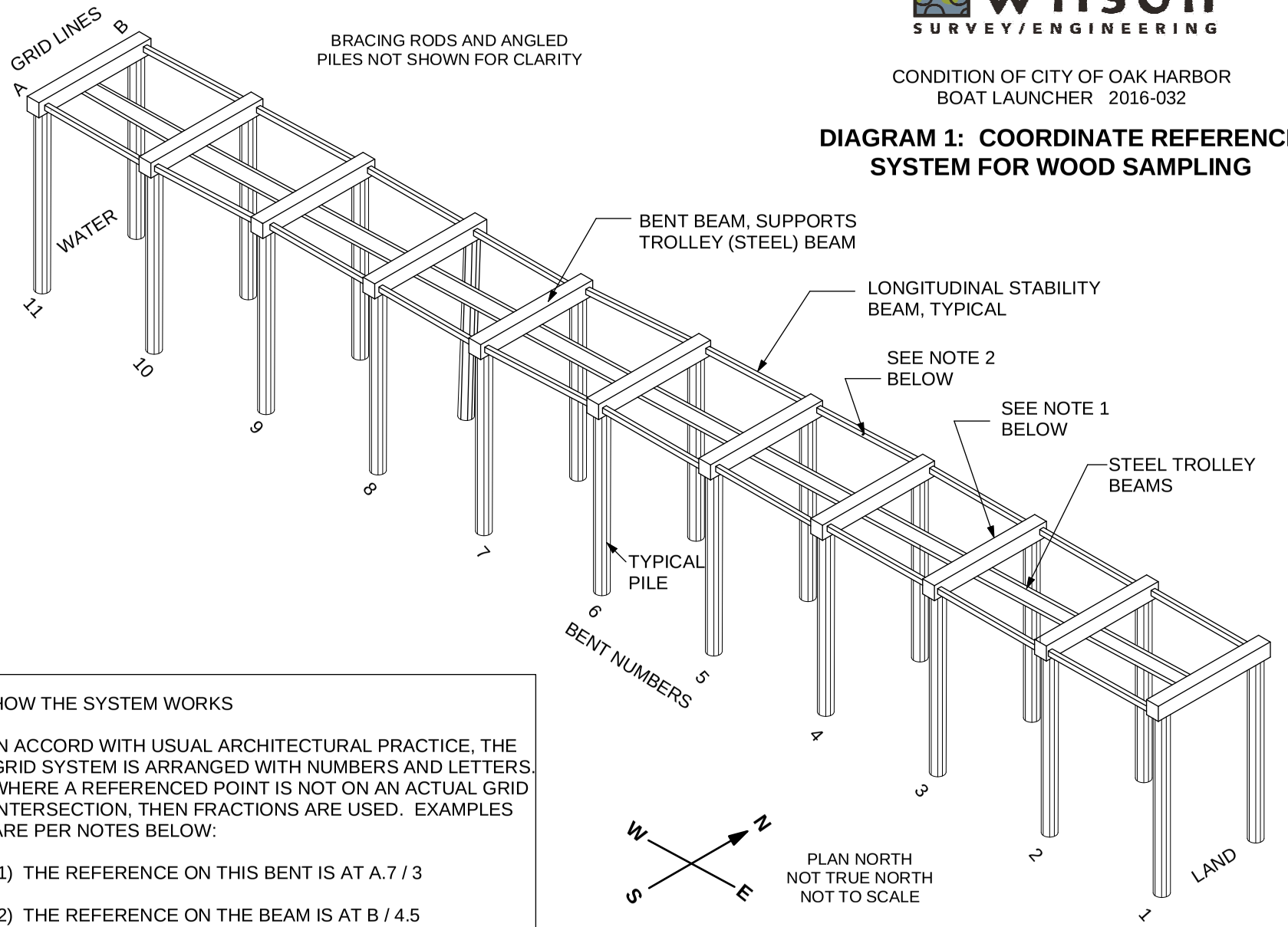

HOW THE SYSTEM WORKS

IN ACCORD WITH USUAL ARCHITECTURAL PRACTICE, THE GRID SYSTEM IS ARRANGED WITH NUMBERS AND LETTERS. WHERE A REFERENCED POINT IS NOT ON AN ACTUAL GRID INTERSECTION, THEN FRACTIONS ARE USED. EXAMPLES ARE PER NOTES BELOW:

(1) THE REFERENCE ON THIS BENT IS AT A.7 / 3

(2) THE REFERENCE ON THE BEAM IS AT B / 4.5

We cancelled the load test after the sampling of the bent beams was complete. The load test was intended to show hidden damage by detection of excessive deflection by soft beams. The nearly universal poor samples of the bent beams made this unnecessary, and potentially more risky than informative.

INITIAL CONCLUSIONS

The following conclusions have been reached on the basis of our observations and sampling, while the best ways to implement them will be informed by structural analysis and estimated probable construction costs:

- The bent beams (except for the steel replacement at Bent 9) should all be replaced. While there are techniques to repair such decay with injection of epoxy, removal of the beams to do so would likely destroy them, and repair in place would be extremely difficult. The result would not be as reliable as replacement.
- The steel trolley beams should have the overplating ground off and replaced, and the beams should then be regalvanized or coated with zinc rich paint. As an alternate, and perhaps just as economical, the beams can be replaced with new material.

CALCULATIONS

Calculations show that the arrangement of the trolley with its wheels at 9'-6" on centers places a bending moment of approximately 21 kip-feet on the trolley beam. This assumes an impact factor of 1.1, appropriate for a slow moving load, and 3.5 kips per wheel. Were the overplate completely effective as it was intended to be, the trolley would be acceptable with a small margin for additional load. The moment is nearly constant for the entire span of the beam.

Note that a W12x22 trolley beam with no further strengthening, analyzed according to the AISC code from the era of this design, would have been overspanned at 20' regardless of load. However, with bracing of the top flanges at 10' centers, the beam would have been rated to 32 kip-feet, an approximate 50% increase versus the imposed loads.

Calculations show also that the overplate likely buckled due to a thermal gradient when the beams were dipped into the galvanizing bath. Even a relatively small 140 degrees (F) increase versus the more massive and stiffer rolled section for the trolley was enough to account for the buckled shape observed. Note that the American Galvanizers Association does not recommend the use of skip welding when galvanizing; this may be one of the reasons.

OBSERVATIONS FROM SITE VISIT AND SCAN

A number of point cloud and scanner photos are given in Appendix C. These are screen shots of our data which are representative of the results obtained. In part due to the excellent weather, the results were very good. Note that the results of the scanner (the point cloud representing three-dimensional coordinates of the structure from laser returns) covered the entire structure. Full color photos only could be obtained from a looking-from-below perspective, although the perspective can be moved and zoomed. As shown on some of the examples, dimensions can be obtained after the fact.

The first (point cloud) screen shot looks somewhat strange insofar as the boats were moving with the tide during the duration of the scanning – they were not in constant position. Also seen in our data is that the bracing rods are "fuzzy" --- they were loose enough to move two or three inches upon occasion, which matched our observations in the gondola. However, the pilings appear to be generally plumb, which is a confirmation that they are in good condition.

There are accurate enough measurements that can be obtained to put together an "as built" set of drawings.

RECOMMENDED REPAIRS

Please refer to the sketches in Appendix D for graphical representations of the recommendations listed below:

1. Remove the W12x22 trolley beams and grind off the overplate, prepare the top surface, and apply a coating of zinc rich paint. Also, the beam-to-beam plates, with 12 bolts, should be repaired. Most of the lower bolts do not engage the nuts to their full extent. As such, they have questionable strength. Although they are mostly to keep the beams aligned, as long as the beams need to be taken down, this should be done.
2. As an alternative to item 1, the beams can all be replaced with new galvanized steel. Note that regalvanizing the existing beams would require them to be sandblasted. For the estimate of probable repair cost, the alternative of total replacement was selected as an upward bound.
3. New braces should be installed to keep the unbraced length of the top flange to 10' or less, as shown on SK-4.
4. The frame over the land end of the structure, bents 1 to 2, should be given a coat of zinc rich primer.
5. Replace all the bent beams (except at bent 9, where steel channels have already been installed) with steel beams. Steel is preferable to wood in terms of cost, accessibility to inspection, and the ability to install the new beams. The way in which the steel beam would be supported on top of each piling is shown in sketch SK-3.
6. At bent 9, the wood bent beam should be pressure injected with epoxy and flashed to protect it from further decay, as decay will accelerate corrosion of the steel channels. (As an alternate, this beam could be replaced.)
7. The single 8x10 wood longitudinal beam that was found to be decayed should be replaced.
8. Other 8x10 longitudinal beams should have checking cracks greater than 1/4 " wide injected with epoxy to protect from decay. Again, see SK-3.
9. All the 8x10 longitudinal beams should be overflashed with galvanized or aluminum sheet metal.
10. The brace rods can be re-used, though they would be shortened, and threaded to turnbuckles. These would be attached to the top-of-pile connections per SK-3. No field welding is anticipated; a magnetic clamped drill would drill into the connections in order to attach the weldment.
11. Given that access to the entire structure will be needed, it might also be prudent to consider conversion to more efficient and longer lasting LED area lighting. (This is not a structural element, but will be considered in the opinion of probable construction cost.)

ANTICIPATED CONSTRUCTION SEQUENCE

The anticipated construction sequence given below is a scenario that was devised in order to construct the opinion of probable construction cost. Contractors will doubtless have their own ideas as to how best approach the project, given their own equipment versus that which they would have to rent, and the skills and limitations of their labor force. This sequence is by no means a requirement that should be placed upon a contractor.

This sequence only covers major elements, and is not meant to be a comprehensive schedule.

- Using a rented crane, replace the bent beams, the longitudinal 8x10, and the W12x22 for the first three bents. The crane would not have to be very large or relatively expensive to rent, and the work could be done from land. (Working from a barge is more difficult and expensive).
- At bent 4, place a pair of beams spanning from the 8x10s framing into the tops of the pilings. These can be used for temporary support of the trolley (used only for light materials and personnel, always in harness). They can also be used for lowering the demolished bent beam 4, and lifting up a new beam. The new beam, since it has a much smaller cross sectional area than the connection for the 12x16 wood beam, can be threaded through one connection and then the other. The weldments at the top can be installed, and the X bracing rods installed tightly.
- This would be repeated all along the structure until all the bent beams are replaced.
- At this point, temporary beam pairs would be placed at bents 4 and 5, and used to support the W12x22 to be removed and replaced.
- This would be repeated out to the end of the structure.

The advantage of this sequence is in savings for crane rental. I discussed this with a representative of Sicklesteel Crane, who said that a crane that would be capable of doing the work at the beginning of the sequence would cost $250/hr. to rent, including the operator. If left on site without the operator, it still would be charged at $165/hr. The cost of operating from a barge could be double, and the cost for a large crane that could operate for the entire reach from a point on the concrete apron would also be $500/hr., plus setup and takedown charges. Minimizing crane use would be a goal for a successful contractor's sequence.

OPINION OF PROBABLE REPAIR COST

As described above, the construction sequence is a key variable that would have a large influence on costs. Also, in the last two years estimates have tended to be low due to the recovery from the recession with costs increasing. Therefore, a larger than usual contingency should be used in order to set a reasonable budget.

Costs have been obtained from calls to local material suppliers (especially timber), galvanizers, and by use of the R.S. Means online cost database. See Appendix E for more detail on assumptions.

The estimate comes to $197,607, which should be more reasonably rounded to $200,000, given the inherent uncertainties involved. See Appendix E for a detailed breakdown.

APPENDIX A: DESIGN DRAWING

APPENDIX B: FINDINGS OF WOOD SAMPLING

WOOD RATING SYSTEM

Wood samples taken during field work were rated in four classes using the following system. The ratings take into account the resistance of the electric drill through the wood, the aroma of the wood, the appearance/ texture of the material removed, and finally the moisture content of the material removed.

Class	Drilling Difficulty	Aroma	Appearance &Texture	Moisture
1	10# to 15# force, bit advancing perhaps 1/4" per second Bit gets hot	Treatment chemical, then same as fresh sawn lumber	Fibrous and yellowish	Dry but not powdery
2 **	Quick progress	Faint aroma of treatment	Grey	Dry powder
3 **	Very quick, perhaps more than 1" per sec. or can shove without drill running, with only 5# force	Faint aroma of treatment	Reddish Brown Not fibrous	Moist, can be balled like clay
4 **	After core, can shove without drill running with very slight force	Slightly unpleasant odor	Reddish Brown	Watery

** For classes 2, 3, and 4: The outer 2" to 3" is the same as class 1 wood, as the treated portion is in good condition. After penetration of the protected shell, the deteriorated wood is as described above in terms of mechanical resistance to drilling, aroma, appearance, and moisture

In some cases, as can be seen when results are reported on the next page, the classification is not clear cut, so a result that indicates an "approximately fitting classes" is shown with a hyphen

WOOD SAMPLE RESULTS

Wood samples taken during field work are categorized per the system described on the preceding page per the table below. The reference system is found in the main body of this report, and repeated in a smaller and less annotated version at the end of the page for easy reference. Unless noted otherwise, samples were taken from sides of the beams, approximately 3" from the top surface.

Bent / Beam	Grid Ref.	Wood Class	Notes	
Bent	A.5 / 1	3 - 4		
Bent	A.5 / 2	4	See photo	
Bent	A.7 / 3	2	3" from top	This bent was explored
	A.5 / 3	2	3" from top	extensively to look for
	A.2 / 3	2	3" from top	moisture
	A.2 / 3	2	6" from top	
	A.2 / 3	2	3" from bottom	
	A.2 / 3	2	3" from bottom	
Bent	A.7 / 4	3	See photo	
Bent	A.5 / 5	3		
Bent	A.5 / 6	3 - 4	After "shell" could shove drill in	
Bent	A.7 / 6	3 – 4	After "shell" could shove drill in	
Bent	A.5 / 7	3 – 4	After "shell" could shove drill in	
Bent	A.5 / 8	3		
Bent	A.5 / 10	1	Wood drill too hot to touch after 2"	
	A.5 / 10	1	Wood drill too hot to touch after 2"	

Note that bent 9 had steel channels to repair it, but could be seen to have sagged (with reference to flat steel) approximately 1.5". Bent 11 was beyond the reach of the gondola, and could not be safely accessed.

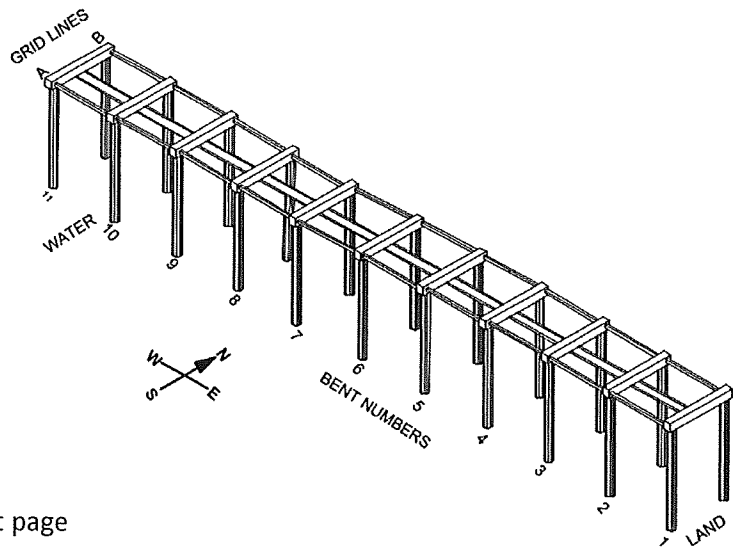

Continued on next page

Bent / Beam	Grid Ref.	Wood Class	Notes
Beam	B / 1.5	3	
Beam	A / 1.5	1	
Beam	B / 3.5	1	
Beam	B / 6.5	1	
Beam	A / 7.5	1	
Beam	B / 8.7	1	Explored near checking crack

PHOTOS OF WOOD SAMPLES

All photos taken are being turned over to the Oak Harbor City Engineer. The photos shown here are to help illustrate the wood classification system.

Bent A.5 / 2 Note that the moisture in the sample glistens. This is Class 4.

Beam B / 1.5 Moisture allowed the material to be wadded, but it had no discernable strength. Note that this was the only longitudinal beam that dexhibited decay, but the Class 3 wood was typical of many of the bents as well.

Class 1 wood, in this case from Beam A / 1.5

Note that we were unable to get photos of Class 2 material. As such material is dry, it flew away much in the way that dust does, and we could not collect it.

APPENDIX C: REPRESENTATIVE SCAN SCREEN SHOTS

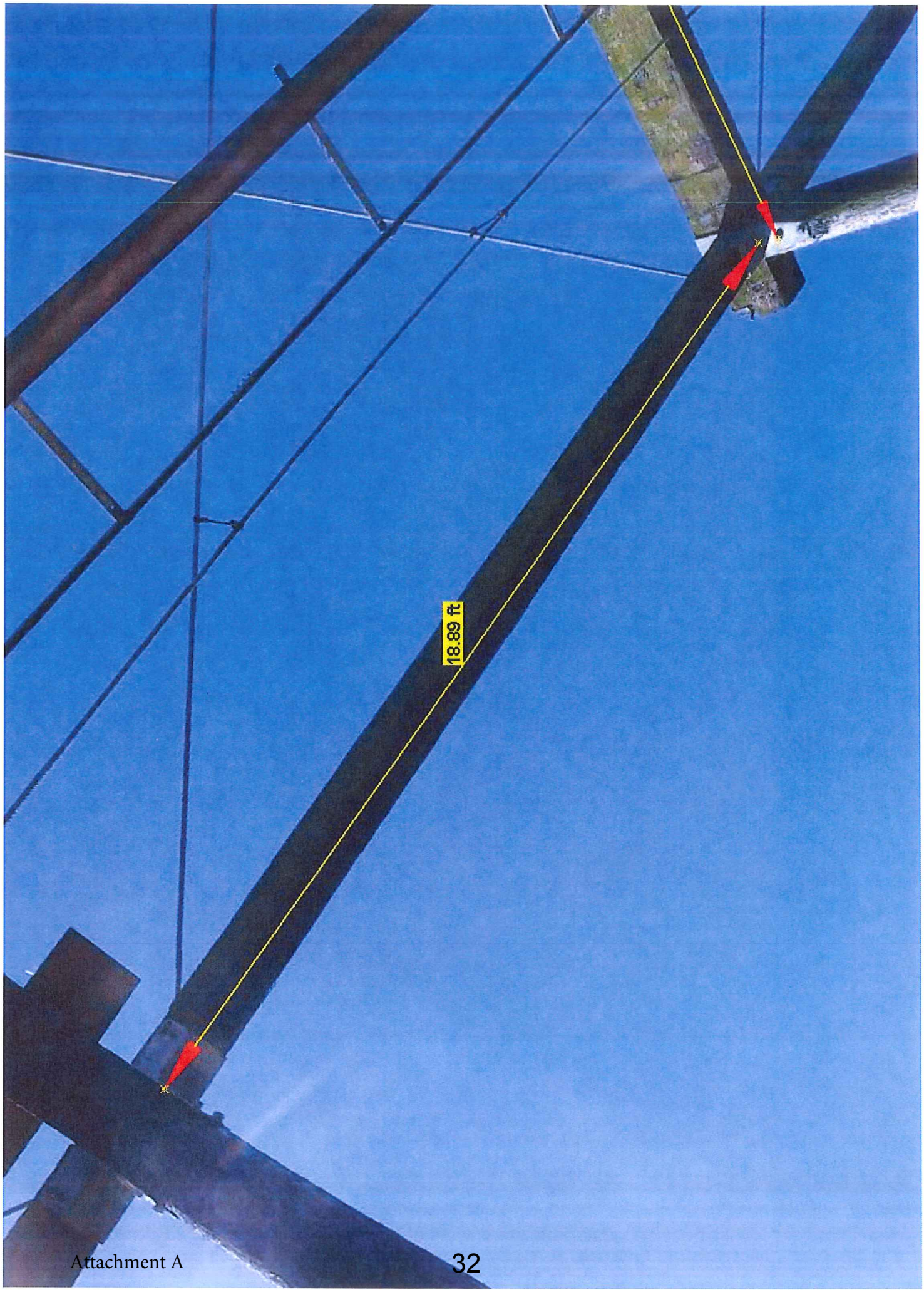
18.89 ft

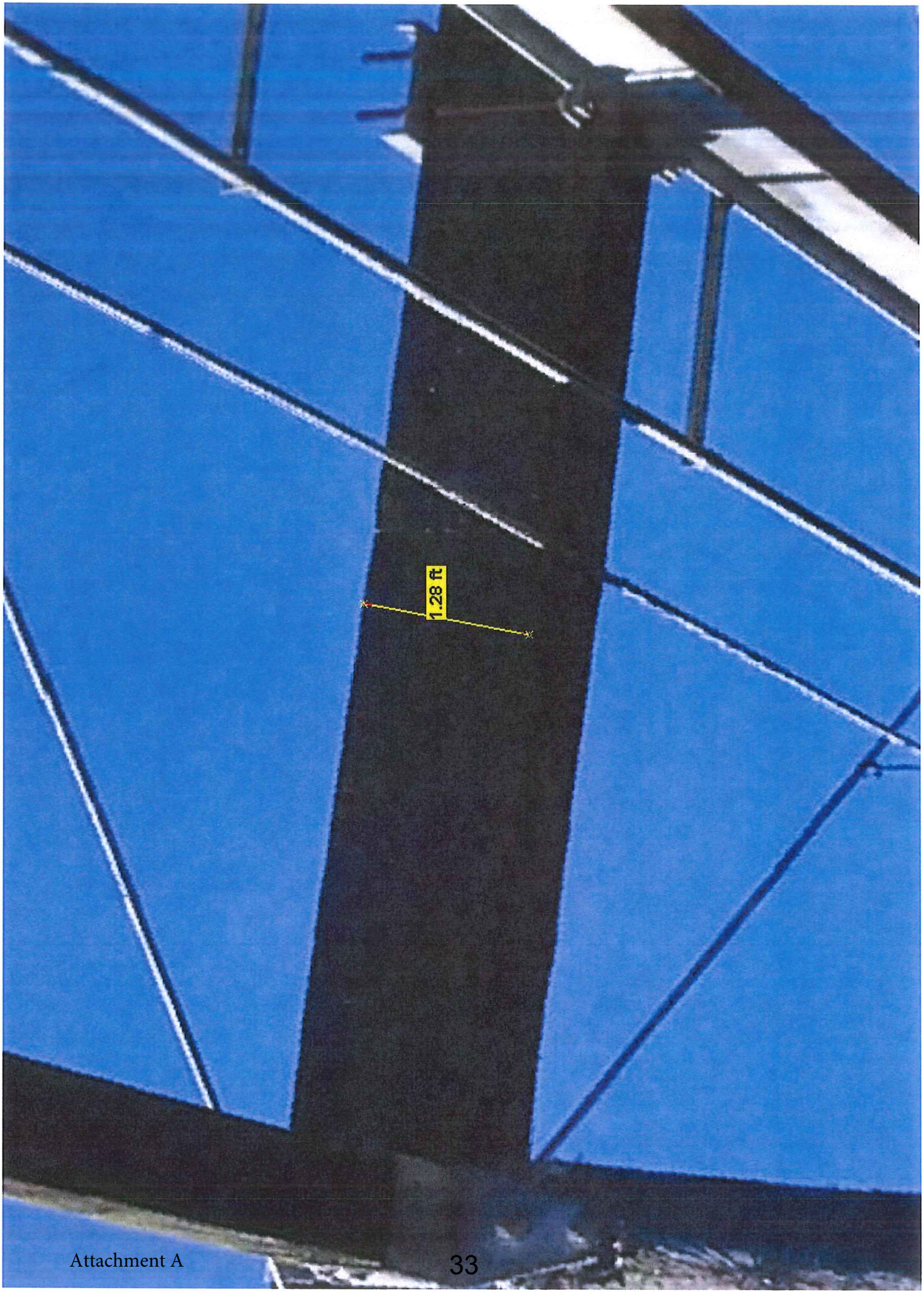
1.28 ft

15.11 ft

APPENDIX D: SKETCHES DESCRIBING ANTICIPATED REPAIRS

Wilson SURVEY/ENGINEERING

PROJECT OAK HARBOR BOAT LAUNCHER EVALUATION

PROJECT # 2016-032

BY C WAUGH DATE 12 APR 2016

SK-1

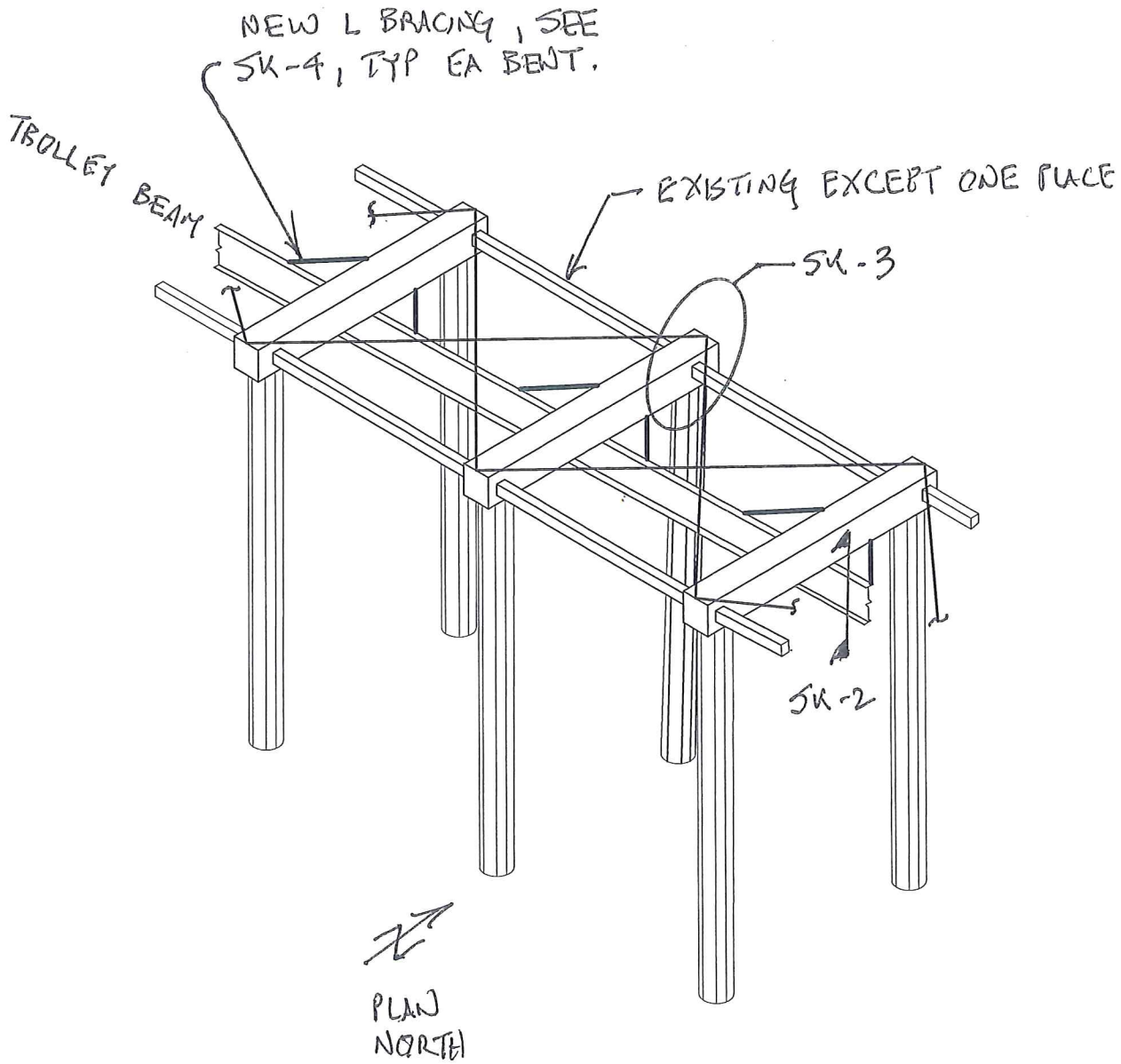

Attachment A

Wilson SURVEY/ENGINEERING

PROJECT OAK HARBOR BOAT LAUNCHER EVALUATION

PROJECT # 2016-032

BY C WAUGH DATE 12 APR 2016

SK-2

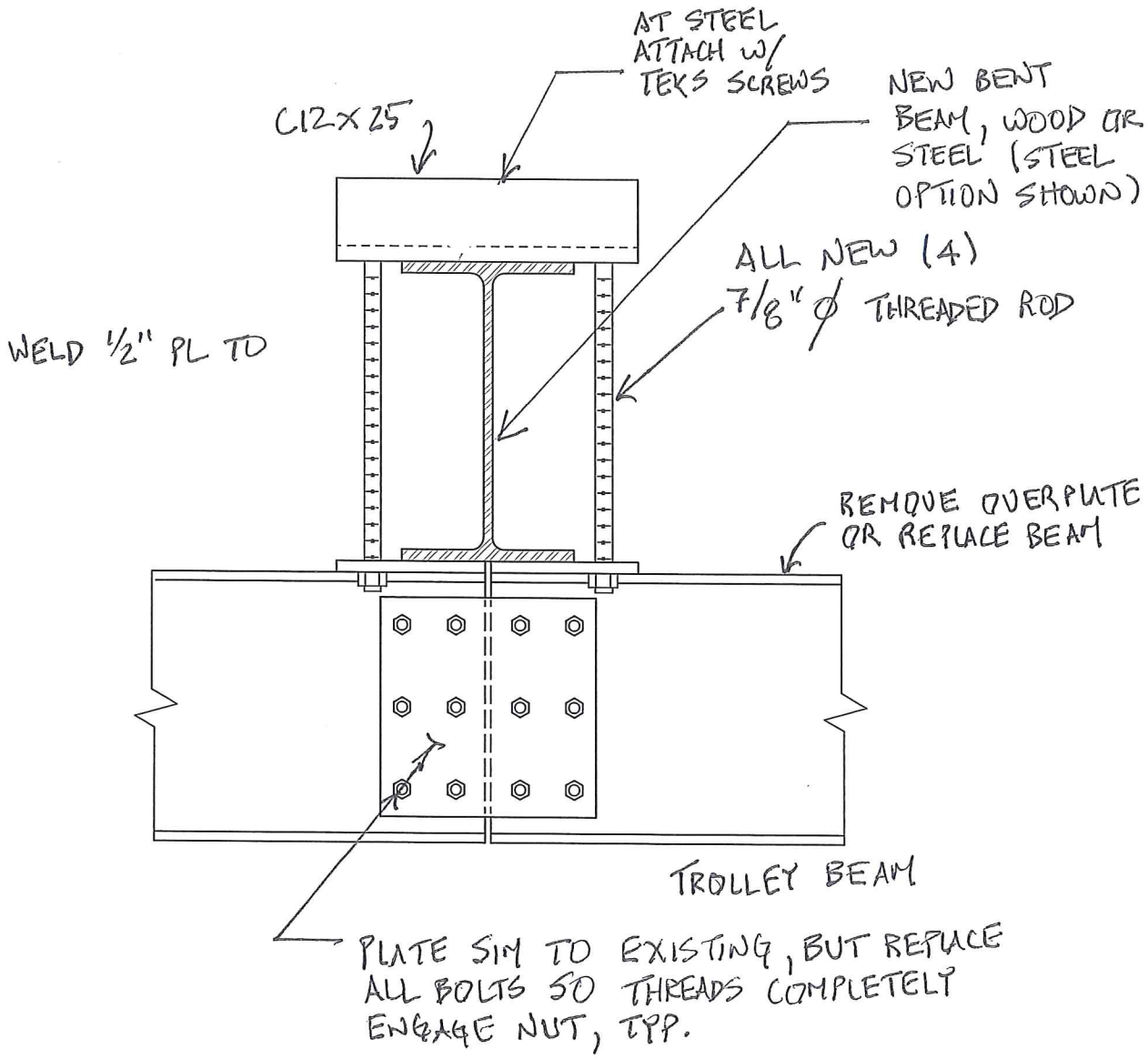

Attachment A

Wilson SURVEY/ENGINEERING

PROJECT	OAK HARBOR BOAT LAUNCHER EVALUATION
PROJECT #	2016-032
BY	C WAUGH
DATE	12 APR 2016

SK-3

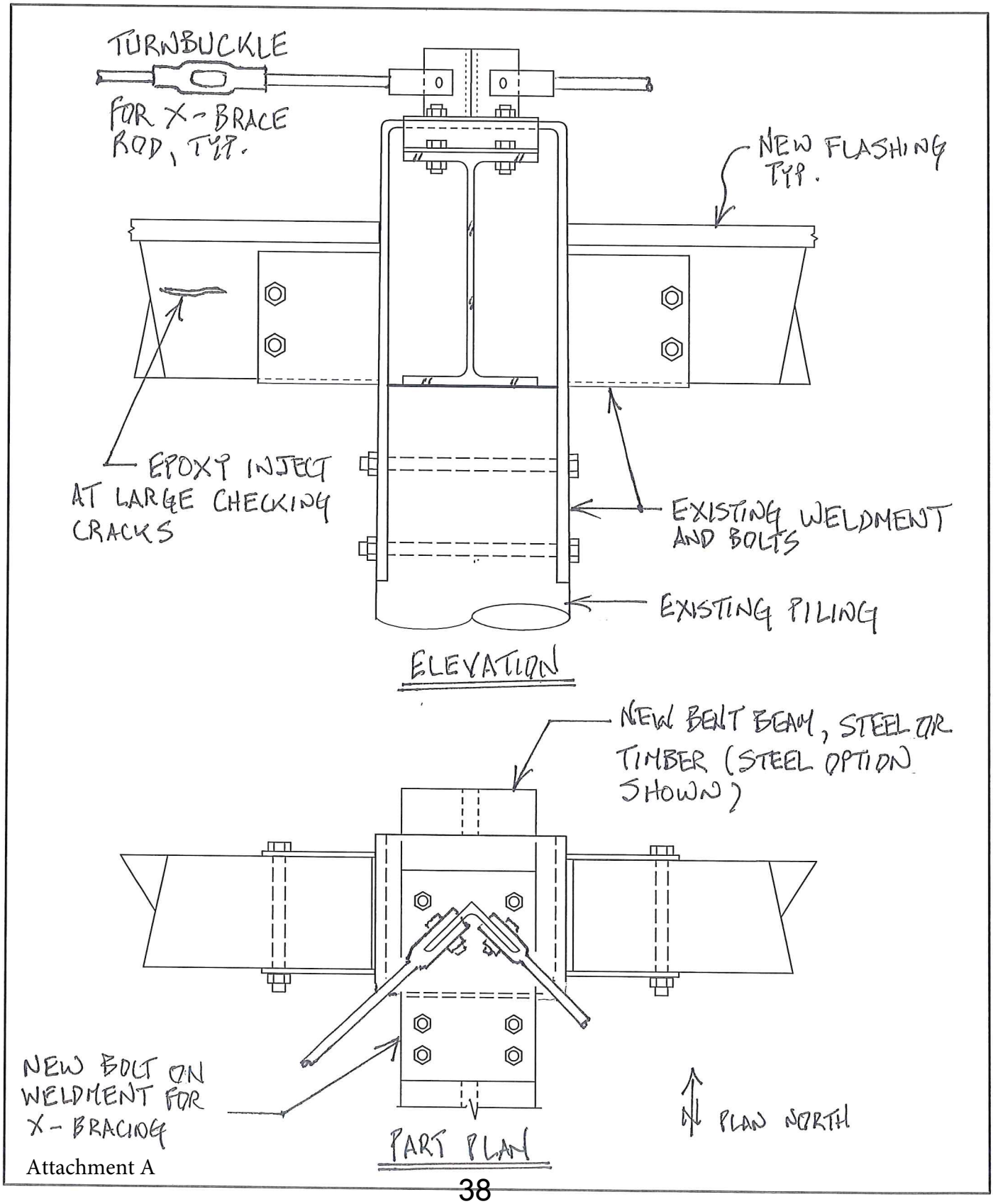

Wilson SURVEY/ENGINEERING

PROJECT OAK HARBOR BOAT LAUNCHER EVALUATION

PROJECT # 2016-032

BY C WAUGH DATE 12 APR 2016

SK-4

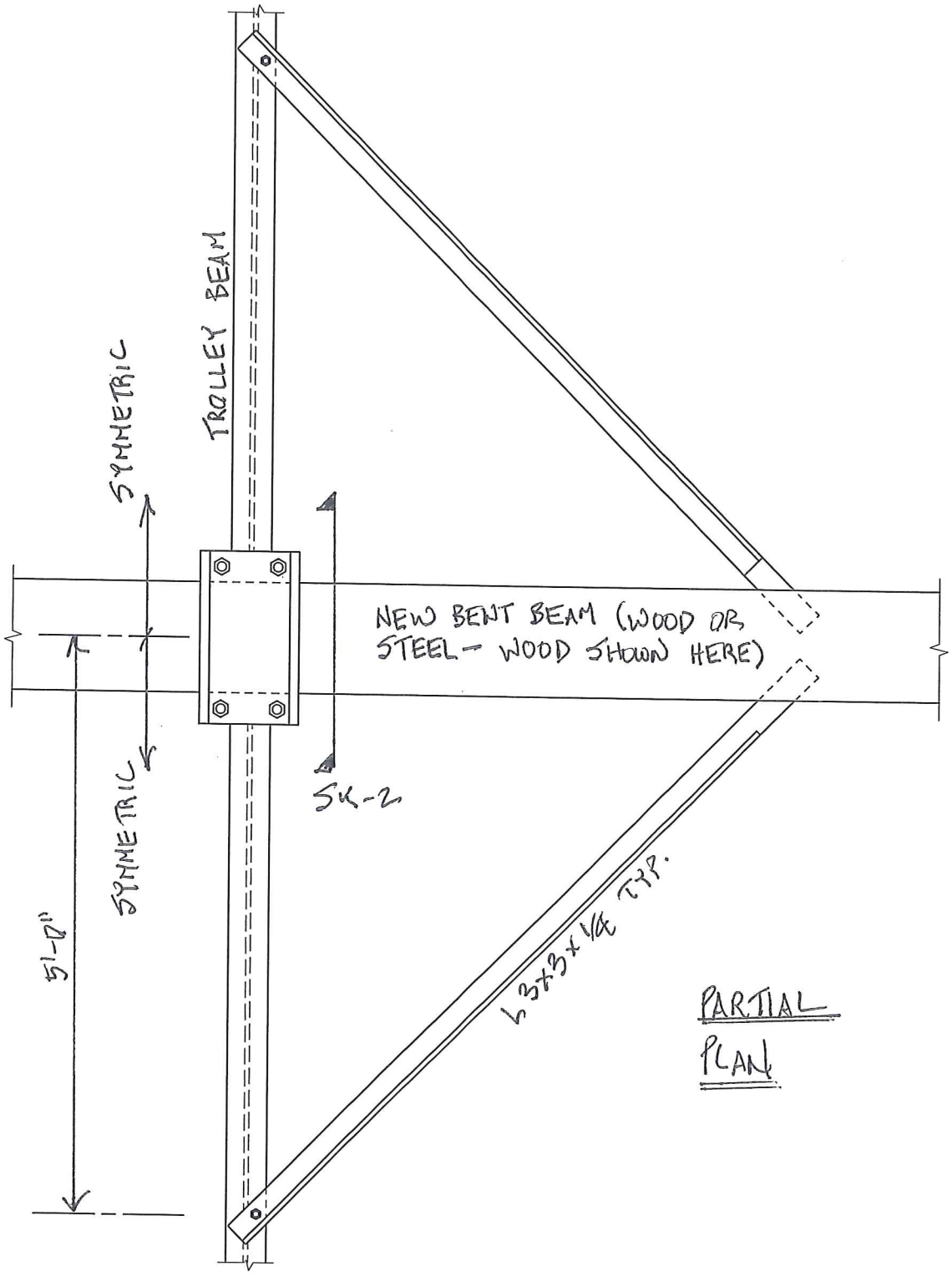

APPENDIX E: ESTIMATE OF PROBABLE REPAIR COST FOR OAK HARBOR BOAT LAUNCHER

ITEM	$ / UNIT		UNITS	$
FIXED COSTS				$2,500
Trailers and fencing rental 2 weeks				$1,000
Supervisor at 1/2 time				
CRANE ALLOWANCE	$165		80.0	$13,200
80 hours on site charged to contractor	$85		24.0	$2,040
24 hours of crane operator				
DEMOLITION:	$60		384.0	$23,040
Labor				$2,304
Small Tools 10% allowance	$300	/ ton	5.0	$1,500
Transport and tipping for rubbish				
REPLACEMENT OF 200' TROLLEY BEAM	$2.20	/lb.	4400.0	$9,680
Materials	$60		200.0	$12,000
Labor				
INSTALLATION OF NEW ANGLE BRACING	$50	ea.	20	$1,000
Materials	$60		40.0	$2,400
Labor				
REPLACEMENT OF 10 BENT BEAMS	$2.20	/lb.	5120.0	$11,264
Materials	$60		100.0	$6,000
Labor				
				$3,000
REMOVE, PAINT, AND REPLACE STEEL FRAME (Bents 1 to 2)				
REPLACEMENT OF SINGLE 8X10 WOOD BEAM	$500	ea.	1	$500
Materials	$60		4.0	$240
Labor				
FLASHING OVER WOOD BEAMS	$6.00	/ sf	500.0	$3,000
Materials	$75		80.0	$6,000
Labor				
				$4,000
ALLOWANCE FOR IN-PLACE EPOXY INJECTION				
WELDMENTS, TURNBUCKLES, BOLTS (SK-3)	$300	ea.	22	$6,600
Materials	$75		44.0	$3,300
Labor				
				$114,568
SUBTOTAL				$8,936
WSST PAID BY CONTRACTOR				$123,504
SUBTOTAL				
				$24,701
GC OH & PROFIT AT 20%				$148,205
SUBTOTAL				
				$49,402
CONTINGENCY AT 33%				
				$197,607
TOTAL				

Note: Galvanized structural steel, simple fabrication for beams, approx. $2.20 / lb. based on RS Means plus galvanizer quote at .45 / lb.