City of Oak Harbor Washington

Handrails Type I & II

Construction Tip Sheets

Tip Sheet
TS 15-A
Drawn By: dwa 04/2012

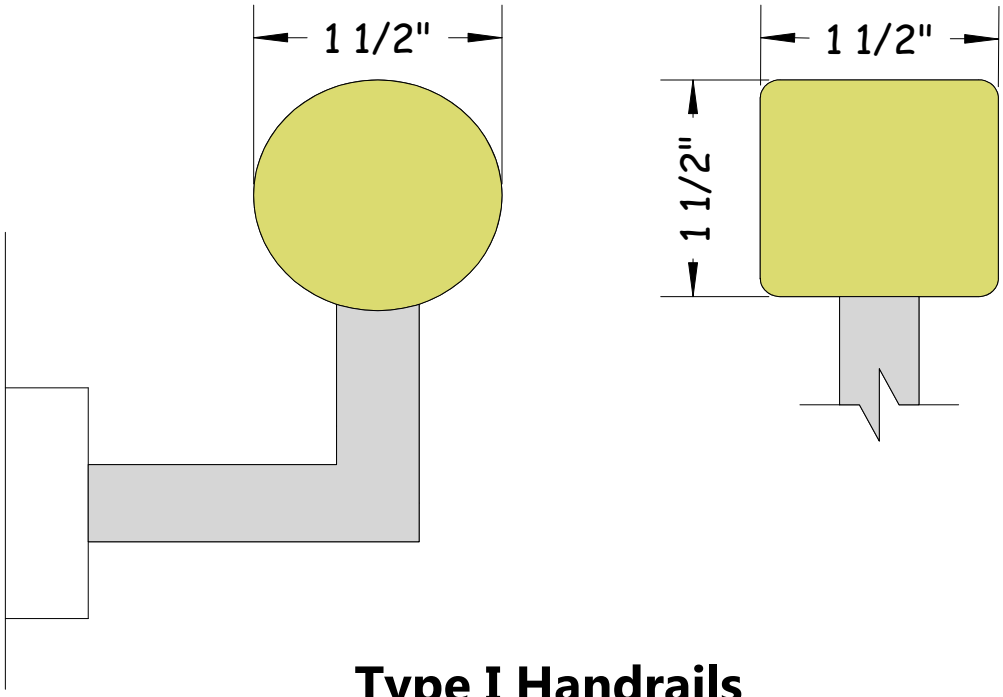

Type I Handrails

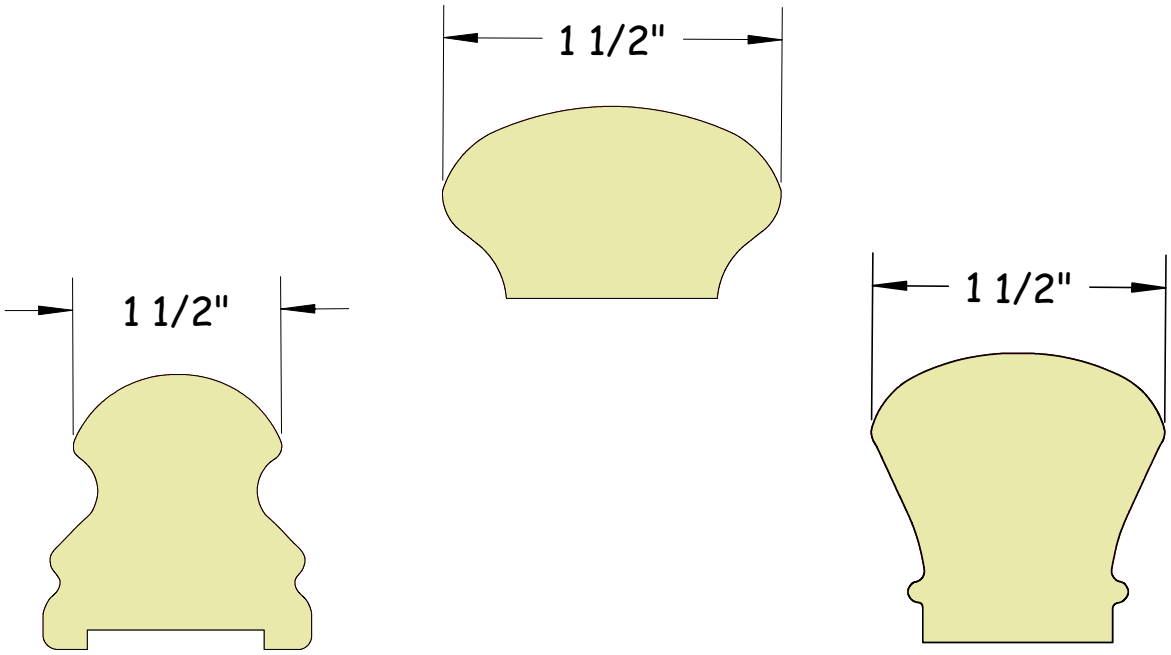

Type II Handrails